एसजेवीएन लिमिटेड SJVN Limited
(भारत सरकार तथा हिमाचल प्रदेश सरकार का सांझा उपक्रम)
(Navratna CPSE)
(नाथपा झाकड़ी जल विद्युत स्टेशन 1500MW)
प्रापण एवं संविदा विभाग, झाकड़ी, जिला शिमला, हि° प्र°-. 172201
http://www.sjvn.nic.in
जी एस टी संख्या (GST No.) 02AAICS1307F1ZY
सिन् संख्या (CIN No.) L40101HP1988GOI008409

{Domestic Competitive Bidding}

(THROUGH E-PROCUREMENT)

FOR

"Repair/Strengthening of Approach Road from Steel Bridge to Dam Top on Right Bank (RD 0.00 m to 1500.00 m) at NJHPS Nathpa" (PCD – 2977 (Civil)/2026)

TENDER DOCUMENT

VOLUME – I

Tender No.: PCD - 2977(Civil)/2026

VOLUME –I

Table of Contents

SECTION-I **6**
PRESS NOTICE 7
NOTICE INVITING E- TENDER (NIT) 8
SECTION II **16**
INSTRUCTIONS TO BIDDERS (ITB) 17
A. General 17
1. Scope of Bid 17
2. Eligible Bidders 17
3. Qualification of the Bidder 1717
4. Cost of Bidding 19
5. Site Visit 19
B. Bidding Documents 20
6. Content of Bidding Documents 20-21
7. Clarification of Bidding Documents and Pre-bid Meeting 20
8. Amendment of Bidding Documents 21
C. Preparation of Bids 21
9. Language of Bid 21
10. Documents Comprising the Bid 21-21
11. Bid Prices 22
12. Currencies of Bid 22
13. Bid Validity 22-22
14. Earnest Money 23
15. Alternative Proposals by Bidders 24
16. Format and Signing of Bid 24
D. Submission of Bids 24
17. Submission of Documents comprising the Bid 24
18. Deadline for Submission of Bids 25-26
19. Late Bids 25
E. Bid Opening and Evaluation Procedure 26
20. Bid Opening 26-27
21. Process to be Confidential 26
22. Examination of Bids and Determination of Responsiveness 26
23. Correction of Errors 27-28
24. Evaluation and Comparison of Bids 27
25. Purchase Preference 28
F. Award of Contract 28
26. Award Criteria 28
27. Employer's Right to Accept any Bid or Reject any or all Bids 28
28. Notification of Award and Signing of Agreement. 28-29
29. Performance Security Deposit 29
30. Procurement for Local Suppliers regarding 30
31. Corrupt or Fraudulent Practices 30-31
G. Adoption of Integrity Pact **(Not applicable)** 31
32. Integrity Pact **(Not applicable)** 31-32
SECTION III **33**
TENDER FORM 34
FORM OF DECLARATION 36
QUALIFICATION INFORMATION 37
SCHEDULE -A SCHEDULE FOR ACHIEVEMENT OF MAJOR MILESTONES OF WORKS AND COMPENSATION FOR DELAY 39
SCHEDULE - B SCHEDULE FOR CHARGEABLE INTEREST RATES AGAINST ADVANCES, COMPLETION TIME, DEFECT LIABILITY PERIOD, PERCENTAGES OF VARIOUS COMPONENTS FOR PRICE VARIATION/ADJUSTMENT 40-42
SCHEDULE – C 43

CONSTRUCTION SCHEDULE 43
SCHEDULE -D 44
CONSTRUCTION PLANT, EQUIPMENT & MACHINERY AND ITS PLANNING SCHEDULE 44
SCHEDULE-E 45
LIST OF PLANT, MACHINERY & EQUIPMENT IMMEDIATELY AVAILABLE WITH THE CONTRACTOR FOR DEPLOYMENT ON THE WORKS..... 45
SCHEDULE-F - CONSTRUCTION METHODS.....46
PRE-CONTRACT INTEGRITY PACT (Not applicable).....47
SECTION -IV 59
CLAUSE-1: DEFINITIONS:..... 62
CLAUSE 2: INTERPRETATIONS 63-62
CLAUSE 3: SECURITY DEPOSIT..... 64
CLAUSE 4: REFUND OF SECURITY DEPOSIT..... 66
CLAUSE 5: SUFFICIENCY OF TENDER..... 66
CLAUSE 6: CONTRACT DOCUMENTS..... 66
CLAUSE 7: LIFE-SAVING APPLIANCES AND FIRST-AID EQUIPMENT..... 66-65
CLAUSE 8:DUTIES AND POWERS OF ENGINEER-IN-CHARGE'S REPRESENTATIVE 65
CLAUSE 9: ASSIGNMENT AND SUBLETTING 67
CLAUSE 10: FACILITIES TO OTHER CONTRACTORS..... 67
CLAUSE 11: CHANGES IN CONSTITUTION..... 68
CLAUSE 12: POSSESSION AND USE OF SITE 68
CLAUSE 13: ADVANCES AND RECOVERY THEREOF.....67
CLAUSE 14: COMMENCEMENT OF WORK 72
CLAUSE 15: WORKS TO BE CARRIED OUT IN ACCORDANCE WITH SPECIFICATIONS, DRAWINGS AND ORDERS, ETC.....72
CLAUSE 16: SETTING OUT THE WORKS 74
CLAUSE 17: URGENT WORKS..... 75
CLAUSE 18: DEVIATIONS 75
CLAUSE 19: CONTRACTOR'S SUPERVISION 77
CLAUSE 20: INSTRUCTIONS AND NOTICES 77
CLAUSE 21: CONSTRUCTION EQUIPMENT 78
CLAUSE 22: PATENT RIGHTS..... 79
CLAUSE 23: MATERIALS..... 78
CLAUSE 24: POWER SUPPLY 809
CLAUSE-25: SUPPLY OF WATER..... 80
CLAUSE-26: WATCHING AND LIGHTING 81
CLAUSE 27: WORK DURING NIGHT OR ON SUNDAYS AND HOLIDAYS: 81
CLAUSE 28: SITE DRAINAGE, PROTECTION OF TREES AND PREVENTION OF NUISANCE.....80
CLAUSE 29: LABOUR..... 81
CLAUSE 30: REMOVAL OF CONTRACTOR'S MEN:..... 85
CLAUSE 31: MATERIALS OBTAINED FROM EXCAVATION AND TREASURE, TROVE, FOSSILS ETC..... 84
CLAUSE 32: FORCE MAJEURE 86
CLAUSE 33: LIABILITY FOR DAMAGE, DEFECTS OR IMPERFECTIONS AND RECTIFICATIONS THEREOF:.....85
CLAUSE 34: CONTRACTOR'S LIABILITY AND INSURANCE 87
CLAUSE 35: SUSPENSION OF WORKS: 91
CLAUSE 36: FORECLOSURE OF CONTRACT IN FULL OR IN PART DUE TO ABANDONMENT OR REDUCTION IN SCOPE OF WORK..... 91
CLAUSE 37: TERMINATION OF CONTRACT ON DEATH: 93
CLAUSE-38: DEFAULT BY THE CONTRACTOR AND TERMINATION OF CONTRACT IN FULL OR IN PART:..... 93
CLAUSE 39: TIME FOR COMPLETION AND EXTENSIONS:..... 96
CLAUSE 40: COMPENSATION FOR DELAY: 97
CLAUSE 41: INSPECTION AND APPROVAL.....98
CLAUSE 42: COMPLETION CERTIFICATE:..... 99
CLAUSE 43: DEFECTS LIABILITY PERIOD:..... 100
CLAUSE 44: MEASUREMENTS:..... 100
CLAUSE 45: PAYMENT ON ACCOUNT: 1014
CLAUSE 46: PRICE ADJUSTMENT/VARIATIONS..... 107
CLAUSE 47: TAXES, DUTIES AND LEVIES ETC:..... 108

CLAUSE 48: PAYMENT OF FINAL BILL: 109
CLAUSE 49: OVER PAYMENT AND UNDER PAYMENT: 110
CLAUSE 50: TRAINING OF APPRENTICES: 111
CLAUSE 51: CONTRACT MATTERS TO BE TREATED AS CONFIDENTIAL: 111
CLAUSE 52: LAWS GOVERNING THE CONTRACT: 111
CLAUSE 53: PROCEDURE FOR CLAIMS 112
CLAUSE 54: SUM PAYABLE BY WAY OF COMPENSATION TO BE CONSIDERED AS REASONABLE WITHOUT REFERENCE TO ACTUAL LOSS:.....112
CLAUSE 55: ARBITRATION 113
CLAUSE 56: BREAKDOWN OF LUMP SUM ITEMS.....116
CLAUSE 57: DEFECTS LIABILITY PERIOD & UNFULFILLED OBLIGATIONS..... 116
CLAUSE 58: ECOLOGICAL BALANCE 116
CLAUSE 59: GENERAL..... 118
CLAUSE 60: CONTRACTOR'S NEAR RELATIVES EMPLOYED IN SJVN 118
CLAUSE 61: RETIRED GOVT SERVANTS TAKING UP CONTRACT 118
SECTION - V..... 120
1. FORM OF BANK GUARANTEE FOR EARNEST MONEY DEPOSIT..... 121
2. FORM OF BANK GUARANTEE FOR PERFORMANCE SECURITY DEPOSIT..... 124
3. FORM OF BANK GUARANTEE FOR THE CONVERSION OF CASH AMOUNT OF SECURITY DEPOSIT OR RETENTION MONEY..... 127
4. PROFORMA FOR AGREEMENT..... 129
SECTION- VI 131
1. SPECIAL TERMS & CONDITIONS.....132
SECTION-VII 135
BILL OF QUANTITIES 135

VOLUME –II

S. No.	Description	Page no.	
		From	To
1	Scope of Work	AS PER ANNEXURE-I	
2	Safety Code	136	139
3	Technical Specifications	140	172
4	List of Approved Makes of Building Materials	173	-
5	Tender Drawings	174	185

SECTION-I

- **PRESS NOTICE**
- **NOTICE INVITING E-TENDER**

एसजेवीएन लिमिटेड SJVN Limited
(भारत सरकार तथा हिमाचल प्रदेश सरकार का सांझा उपक्रम)
(Navratna CPSE)
(नाथपा झाकड़ी जल विद्युत स्टेशन 1500MW)
प्रापण एवं संविदा विभाग, झाकड़ी, जिला शिमला, हि° प्र°-. 172201

http://www.sjvn.nic.in
जी एस टी संख्या (GST No.) 02AAICS1307F1ZY
सिन् संख्या (CIN No.) L40101HP1988GOI008409

PRESS NOTICE

E- Tender No. PCD - 2977(Civil)/2026

Online bids (e-tender) on Domestic Competitive Bidding (DCB) are invited on behalf of SJVN Ltd. for **"Repair/Strengthening of Approach Road from Steel Bridge to Dam Top on Right Bank (RD 0.00 m to 1500.00 m) at NJHPS Nathpa".**

Last date for downloading of bid document is 26/08/2026(12: 00 Hrs.)
Last date for bid submission is 27/08/2026(13:00 Hrs.)

For details & all future amendments/corrigendum to the NIT please visit websites https://etender.sjvn.co.in, www.sjvn.nic.in, and www.eprocure.gov.in.

For and on behalf of SJVN Ltd.

विभागाध्यक्ष
प्रापण एवं संविदा विभाग,
एनजेएचपीएस, एसजेवीएन लि0 ,
झाकडी–172201

एसजेवीएन लिमिटेड SJVN Limited
(भारत सरकार तथा हिमाचल प्रदेश सरकार का सांझा उपक्रम)
(Navratna CPSE)
(नाथपा झाकड़ी जल विद्युत स्टेशन 1500MW)
प्रापण एवं संविदा विभाग, झाकड़ी, जिला शिमला, हि° प्र°-. 172201
http://www.sjvn.nic.in
जी एस टी संख्या (GST No.) 02AAICS1307F1ZY
सिन् संख्या (CIN No.) L40101HP1988GOI008409

NOTICE INVITING E- TENDER (NIT)

1. SJVN Ltd. invites Tenders on E-mode from the eligible Contractors **(Except JV/Consortium)** registered with States/Central Govt. Agencies /PSU's / Autonomous bodies, for the following work: **-**

1.	**Name of Work:**	**"Repair/Strengthening of Approach Road from Steel Bridge to Dam Top on Right Bank (RD 0.00 m to 1500.00 m) at NJHPS Nathpa".**
1.1	**Tender No**	**PCD - 2977(Civil)/2026**
2.1	**Time for Completion**	**06 Months**
2.2	**Estimated Cost**	**₹ 1,36,70,959/- (Exclusive of GST)**
3.1	**Cost of Tender Document* (Nonrefundable) –** *To be credited in SJVN's account before last date and time for availability/downloading of the Tender document, by the bidder as per procedure for payment laid down here-under.*	₹ 5900/-(₹ 5000/- +GST @18% i.e. ₹ 900/-)
3.2	**Date and time for availability of Tender document on website https://etender.sjvn.co.in**	Any time between (Date and Time) **04/08/2026 (20:00 Hrs.) to 26/08/2026 (12:00 Hrs.)**
3.3	**Earnest Money Deposit*- *To be paid as per procedure laid down here-in-under.***	**Rs. 273419/-**

4.	**Time, Date and Place of Pre-bid Meeting**	NA
5.	**Deadline for uploading of Technical as well as Financial Bid on SJVN's E-tender Portal : https://etender.sjvn.co.in and submission of documents in physical form**	i. For online submission Date: 27/08/2026 Time 13:00 Hrs ii. For documents in physical form Date: 06/09/2026 Time 13:00 Hrs. (The time limit for submission of documents in physical form shall be ten (10) days after the deadline for submission of e bids).
6.	**Time and Date for opening Technical Bid(s)**	Date 27/08/2026 Time **14:00 Hrs**
7.	**Time and Date of opening Financial Bid(s)**	The date of opening of Financial bid will be informed separately to the bidders whose Technical bid will be found responsive.
8.	**Place of opening Bid(s)**	O/o HOD (P&C), NJHPS, SJVN Ltd. Jhakri
9.	**Authority/Officer inviting Tender**	HOD (P&C), NJHPS, SJVN Ltd. Jhakri , Tehsil Rampur Bsr., Distt. Shimla (HP)-172201 E-mail: rajeshkr.negi@sjvn.nic.in

Note: Being civil work tender MSEs/NSIC/Startup India registered firms are not exempted from the deposition of Cost of Tender Document & Earnest Money Deposit/Bid Security.

1. PROCEDURE/Mode FOR PAYMENT: (For cost of Tender Document and EMD)

Cost of Bid Document and Earnest Money deposit (EMD/ Bid Security)

1.1 The cost for purchase of bid document is **₹ 5,900- (Rupees Five thousand Nine hundred only) (Non-refundable) i.e. (₹ 5,000/-+GST @18% i.e. ₹900/-).**(To be credited in SJVN's account before last date and time for availability/downloading of the Tender document, by the bidder as per procedure for payment laid down here-under.)

1.2 EMD/Bid Security: The bidder shall furnish, a bid security/ earnest money as part of the bid amounting to **₹ 273419/- (Rupees Two Lakh Seventy Three Thousand Four Hundred Nineteen Only) . This EMD/ Bid**

security is to be submitted through online or FDR/TDR/BG as mentioned at 1.4 below.

1.3 The **"Cost of Bid document"** & **"Earnest Money Deposit (EMD)"** shall be submitted / deposited through online payment gateway on SRM Portal/e-tendering portal.

Caution: In the event of funds remitted to wrong beneficiary account number, **SJVN Limited** or its Bank or its service provider would not responsible for the same.

1.4 **FDR/TDR/BG:** Please note that EMD (Earnest Money Deposit)/ Bid Security in the form of **FDR/TDR (Pledged in favour of the NJHPS, SJVN Limited)/BG (as per SJVN standard Document)** is also acceptable. The EMD (Earnest Money Deposit)/ Bid Security in the form of **FDR/TDR/BG** shall have to be submitted by the deadline of submission of physical documents indicated below at Sr. No. 8 (A) (a) (I, II & III) in a sealed envelope through post / courier or by hand on the address of HOD (P&C), NJHPS, SJVN Ltd., Jhakri, Tehsil Rampur Bsr., Distt. Shimla (HP)-172201, failing which the bid shall be considered as non-responsive & financial bid will not be opened.

Remarks:- The EMD submitted in the form of DDs, local Cheque/ outstations Cheque will not be considered.

1.5 Bid security shall remain valid for a period of 45 days beyond the original bid validity period and beyond any extension subsequently requested. Any correction, alteration and addition in computer generated / other hand written instrument subsequently needs to attested by the appropriate authority of bank.

1.6 **Being Civil work tender MSEs/NSIC/Startup India registered firms are not exempted from the submission of Cost of Tender Document & Earnest Money Deposit/Bid Security.**

1.7 EMD of the bidder shall be forfeited/necessary action may be taken as per bid security declaration, if the bidder withdraws or amends its bids or impairs or derogates from the bid in any respect with in the period of validity of the bid. ***The EMD of the successful bidder shall be retained as contract security until such period the contractor furnishes the required security deposit and shall be released within 30 days from the receipt of the performance security & verification/confirmation thereof***. If the contractor is failed to fulfill his obligations, the EMD, retained as contract security shall be forfeited/necessary action may be taken as per bid security declaration submitted by the firm along with their bid.

1.8 The bid securities/EMD of unsuccessful bidders shall be returned within thirty (30) days after the declaration of result of 1st stage i.e technical evaluation.

1.9 **<u>EMD of bidder(s) will be refunded only to designated account submitted by the bidder at the time of registration with SJVN irrespective of mode of payments made.</u>**

1.10 **No interest shall be payable by the SJVN on EMD.**

1.11 Tender without cost of document & Bid security/EMD will be rejected.

1.12 The bid security/ EMD and bid security exemption certificates shall remain valid for a period of 45 days beyond the original bid validity period and any extension subsequently requested. If the Bid security/ Exemption certificate is not found valid for 45 days beyond the original bid validity period and any extension subsequently requested, SJVN may ask the bidder to extend the validity of the Bid security/ Exemption certificate for a period up to 45 days beyond the original validity period and any extension subsequently requested or else submit the EMD/ Bid security. Such EMD/ bid security shall be sent as per clause no. 1.4 & 1.6 as above and the same should submitted within ten (10) days from the date of SJVN's clarification.

1.13 In case EMD is submitted by way of Bank Guarantee; while issuing the physical BGs, the Supplier's/contractor's Bank shall also send electronic message through secure SFMS to Employer's/Buyer's Beneficiary Bank whose details are provided as below.

Beneficiary Name:	SJVN LTD O AND M ACCOUNT, Payable at SBI Jhakri
Account No:	11543142129
IFSC Code:	SBIN0006988
Bank Branch:	SBI Jhakri

2. Tender document consisting of qualification information and eligibility criterion of Tenders, plans, specification, drawings, the bill of quantities of work to be done and the set of terms and conditions of contract will neither be issued manually nor be sent by post or courier; the same can be viewed and downloaded by the registered bidders only on SJVN's E-Tender portal **https://etender.sjvn.co.in**

3. To qualify for award of the Contract each bidder should have;

A) The Bidder must have an average annual turnover of **₹ 41,01,288/- (₹ Forty One Lakh One Thousand Two Hundred Eighty Eight only)** during last three years ending 31st March of previous financial year.

Remarks: -

i) Annual financial turnover should be supported by Annual Report for Financial Standing (Balance Sheet and Profit & Loss Account) of last three (03) years ending **31/03/2026**. In case the "Annual Report for Financial Standing / Final Turnover" of previous financial year **2025-26** is not finalized till the submission of bid, the provisional financial turnover for the year ending **31/3/2026** should be submitted by the bidder duly authenticated/audited by the concerned statutory auditor or an authorized practicing Chartered Accountant or an authorized firm of Chartered Accountants, as applicable.

ii) CA certificate is also acceptable if "Annual Report for Financial Standing" is not applicable to the bidder as per applicable Act(s)/Rule(s).

iii) Annual Report/CA certificate should be authenticated with UDIN.

iv) Further any shortfall of document(s) for already submitted details/information for "Turn Over" along with the bid can be asked; however no such document(s) shall be asked if no details/information regarding the "Turn Over" is provided in the bid submitted by bidder(s).

B) **Proven/Technical Experience**:

To qualify for award of the Contract, the Bidder as sole Contractor or partner of Joint venture or sub-contractor approved by the employer should have experience of executing at least one similar work of value not less than **₹ 68,35,480/- (Rupees Sixty Eight Lakh Thirty Five Thousand Four Hundred Eighty only)** in preceding Seven (07) years.

Similar work means work related to " ***Civil works , which involves the execution of most of the items related to the BOQ of this work or higher specifications***"

i) The period of seven years as above shall be reckoned from the date of issue of NIT i.e from the date of uploading of tender on website(s)

ii) In case of ongoing works contract, the value of completed work done shall be considered for the purpose of qualifying criteria.

Note:- In support of the similar work experience the bidder shall submit the following: -

i) The bidder must have to submit/upload documentary proof of the work experience along with copies of the B.O.Q. of the executed work. In case documentary proof of work experience is issued by private company (ies) /firm (s), then copy (ies) of TDS for the same work are also needs to be submitted by the bidder.

ii) Further any short full documents i.e LOA/BOQ/Completion certificate/TDS etc. for the already submitted "work experience" along with bid can be sought. However, NO new work experience/LOA/ Contract shall be asked during the evaluation of bids.

Remarks:- Being civil work tender MSEs/NSIC/Startup India registered firms are not relaxed from the condition of Prior Financial turnover and prior work done experience. MSE's/NSIC/Startup India registered firms have to submit/upload financial turnover and work done experience certificate of similar work fulfill independently as per Qualifying criteria of tender considering critical work related to safety of plant.

C) GENERAL CONDITIONS OF QUALIFICATIONS:

a) SJVN reserves the right to cancel / withdraw the invitation for bid without assigning any reason and shall bear no liability whatsoever consequent upon such a decision.

b) Notwithstanding anything stated above, SJVN reserves the right to assess the Bidder's capability and capacity to perform the contract satisfactorily,

should the circumstances warrant such assessment in the overall interest of SJVN.

c) The above-mentioned requirements are minimum and the SJVN Ltd. reserves the right to ask for any additional information.

4. Downloading Tender Document

Bidder to access **https://etender.sjvn.co.in** to download NIT document, after completing registration formality (if required) and successful login vendor need to process for Tender Fee/ Document Fee as per the provisions of bid documents and thereafter bidder can download detailed tender document**.**

5. Bid Submission:

I. Bidder needs to login on SJVN tendering portal i.e. **https://etender.sjvn.co.in**

II. Search tender by filling necessary searching criteria after Login.

III. Please refer to attached document of "Bidder User manual".

Bidder(s) are also advised to keep on visiting the websites as mentioned below for any Notification/ Amendment / Addendum/ Corrigendum from SJVN's side in respect of this tender: -

(i) **https://etender.sjvn.co.in**

(ii) **www.sjvn.nic.in**

(iii) **www.eprocure.gov.in**

To give prospective bidders reasonable time in which to take an addendum into account in preparing their bids, the Employer shall extend, as necessary, the deadline for submission of bids.

6. **DIGITAL SIGNATURES**: The bidder should also have the Digital Signatures **(Class II or higher with signing & encryption both)** which are mandatory for security purpose. The digital signatures can be obtained from any of the authorized agencies in India as per IT Act.2000. Valid Digital Certificate must be installed in a computer system from where you want to login on website

Bidders shall be required to arrange all resources, including Digital Signature and Internet Connections at their own cost, for participating in online tenders/ bids at SJVN's E-tender portal.

7. All the bidders are requested to get themselves registered well in advance and no extra time will be considered for the delay in on-line Vendor Registration, if any. In case bidders wait till the last moment for registration/uploading of Bids, and if any technical problem is encountered at that time and the closing time may elapse, SJVN Ltd. shall not be responsible in any manner for such delay/ or any other reason thereof.

8. SUBMISSION OF BID(S):

(A) The tender shall be comprising of two parts in the following manner:

(a) Techno-Commercial Bid:

Part-I – Techno-Commercial Bid comprises of following documents:

i) EMD/Bid Security

ii) **Cost of tender Document**
iii) **Registration certificate as contractor (Except JV/ Consortium) for road, building and other civil works enlisted with HPPWD / CPWD / HPSEB / Public Undertakings / any other Govt./ Semi Govt. Organization**
iv) **GST & PAN no.**
v) **EPF Code No.(Working status Live Establishment)**
vi) **Annexure-B (Tender Form)**
vii) **Annexure-C (Undertaking for fraud prevention and detection policy) along with Annexure-II (Guidelines on banning of Business dealings)**
viii) **Annexure-D (Local content)**
ix) **Annexure-E (Form of Declaration)**
x) **Annexure-G (Qualification requirements)**
xi) **Annexure-H (Land Border)**
xii) **Annexure-J (Bid Security Declaration)**
xiii) **Schedule -1**
xiv) **Schedule-2**
xv) **Schedule-D**
xvi) **Schedule-E**
xvii) **Schedule-F**
xviii) **Documents as per clause no. 03 above (Financial statements, experience certificates etc.)**

Note:- Also the bidder shall certify that the documents as uploaded by the bidder are as per original document. The bidder has to upload the scanned copy of original document along with his bid.

(I) The bid documents shall be uploaded electronically and submitted online along with scanned copies of all the requisite documents. Some of the documents viz. Bid Security, Power of Attorney (If applicable), etc. are required to be submitted in physical form also.

(II) The time limit for submission of documents required in physical form shall be ten (10) days after the deadline for submission of e-bids in respect of following documents:-

(i) Bid security/ EMD (If not received online)
(ii) Any other documents required to be submitted in physical form in addition to above as per the requirement of particular tender.

(III) ***The original documents in physical form submitted after the period as specified above at Sr. No. II shall not be entertained and such bids shall be treated as late bids. If the original documents in physical forms are found to be at variance than the scanned copies submitted earlier alongwith e-bids, the bids will be treated as non-responsive.***

(b) <u>Price bid</u> :

Part-II- Price bid i.e. schedule – I (B.O.Q.).
The price is to be filled in ONLINE Dynamic schedule. The price quoted by the bidder only in the dynamic schedule shall be considered for price bid evaluation.

9. The bids submitted by the bidders shall remain valid for acceptance for a period of one hundred eighty **(180) days** from the date of opening of bids. If any Bidder withdraws his bid before the said period or makes any modifications in the terms and conditions of the bid, the Employer shall forfeit the said Earnest Money.

10. The Intending Tenderer must have their GST No., PAN, EPF Code etc. and the bidders shall have to upload the same along with their Techno-Commercial bid.

11. Employer reserves the right to cancel the tendering process at any time before award of work.

12. For any assistance/ clarification for e–tendering registration, submission of bid through e-tendering/ procurement, bidder may contact the following person: -

i) Sh. Ranjan: Mobile No. 08580548817 ***(E-mail ID: etender.support@sjvn.nic.in"***

The above persons are to be contacted for help/ assistance related to e–tendering registration, submission of bid through e-tendering only.

For any other clarifications regarding the tender bidder may contact the following persons/ representatives of M/s SJVN:-

(i) Sh. Randei Rana :- (E-mail ID randei.rana@sjvn.nic.in)

(ii) Rajesh Kumar (E-mail ID: rajeshkr.negi@sjvn.nic.in).

13. The Helpline Nos. for providing Technical Support to Bidders for respective sites under the Link "**Helpline and Help Documents for Bidders"** are mentioned on the Portal itself.

14. All submissions/ correspondence /clarification to Tender Document and any other information, with regard to the above shall be made at the following Address:

Address: **HOD (P&C), NJHPS,**
SJVN Ltd. Jhakri, Tehsil Rampur Bsr.,
Distt. Shimla (HP)
e-mail:- rajeshkr.negi@sjvn.nic.in

विभागाध्यक्ष
प्रापण एवं संविदा विभाग,
एनजेएचपीएस, एसजेवीएन लि0
झाकडी–172201

SECTION II

INSTRUCTIONS TO BIDDERS (ITB)

INSTRUCTIONS TO BIDDERS (ITB)

A. General

1. Scope of Bid

1.1 The SJVN Ltd. hereinafter referred to as SJVN (hereinafter called the Employer) invites bids for the construction of Works, as described in Scope of work, Volume-II and referred to as "the Works". The name and identification number of the works is provided in the NIT. **The bidders may submit bids for the Works detailed in the table given in the Notice Inviting Tender**.

1.2 The successful Bidder will be required to complete the Works in the Time for Completion mentioned in the Schedule–"B" in accordance with Conditions of Contract.

1.3 Throughout these documents, the terms "bid" and "tender" and their derivatives (bidder/Bidder, bid/tender, bidding/tendering, etc.) are synonymous.

2. Eligible Bidders

2.1 This Invitation for Bid is open to all National/Domestic bidders who meet the Qualification Criteria as defined in Clause 3 hereunder.

2.2 Bidders should not be under a declaration of ineligibility for corrupt and fraudulent practices by the Central Government, the State Government or any public undertaking, autonomous body, authority by whatever name called under the Central or the State Government.

3. Qualification of the Bidder

3.1 To qualify for award of the Contract each bidder should have;

a) The Bidder must have an average annual turnover of **₹ 41,01,288/- (₹ Forty One Lakh One Thousand Two Hundred Eighty Eight only)** during last three years ending 31st March of previous financial year.

Remarks: -

i) Annual financial turnover should be supported by Annual Report for Financial Standing (Balance Sheet and Profit & Loss Account) of last three (03) years ending 31/03/2026. In case the "Annual Report for Financial Standing / Final Turnover" of previous financial year 2025-26 is not finalized till the submission of bid, the provisional financial turnover for the year ending 31/3/2026 should be submitted by the bidder duly authenticated/audited by the concerned statutory auditor or an authorized practicing Chartered Accountant or an authorized firm of Chartered Accountants, as applicable.

ii) CA certificate is also acceptable if "Annual Report for Financial Standing" is not applicable to the bidder as per applicable Act(s)/Rule(s).

iii) Annual Report/CA certificate should be authenticated with UDIN.

iv) Further any shortfall of document(s) for already submitted details/information for "Turn Over" along with the bid can be asked; however no such document(s) shall be asked if no details/information regarding the "Turn Over" is provided in the bid submitted by bidder(s).

3.2 **Proven/Technical Experience**:

To qualify for award of the Contract, the Bidder as sole Contractor or partner of Joint venture or sub-contractor approved by the employer should have experience of executing at least one similar work of value not less than **₹ 68,35,480/- (Rupees Sixty Eight Lakh Thirty Five Thousand Four Hundred Eighty only)** in preceding 07 years.

Note:-

a) Similar work means work related to " ***Civil works , which involves the execution of most of the items related to the BOQ of this work or higher specifications***"

b) The period of seven years as above shall be reckoned from the date of issue of NIT i.e from the date of uploading of tender on website(s)

c) In case of ongoing works contract, the value of completed work done shall be considered for the purpose of qualifying criteria.

In support of the similar work experience the bidder shall submit the following: -

i) The bidder must have to submit/upload documentary proof of the work experience along with copies of the B.O.Q. of the executed work. In case documentary proof of work experience is issued by private company (ies) /firm (s), then copy (ies) of TDS for the same work are also needs to be submitted by the bidder.

ii) Further any short full documents i.e LOA/BOQ/Completion certificate/TDS etc. for the already submitted "work experience" along with bid can be sought. However, NO new work experience/LOA/ Contract shall be asked during the evaluation of bids.

Remarks:- Being civil work tender MSEs/NSIC/Startup India registered firms are not relaxed from the condition of Prior Financial turnover and prior work done experience . MSE's/NSIC/Startup India registered firms have to submit/upload financial turnover and work done experience certificate of similar work fulfill independently as per Qualifying criteria of tender considering critical work related to safety of plant.

3.3 GENERAL CONDITIONS OF QUALIFICATIONS:

i) SJVN reserves the right to cancel / withdraw the invitation for bid without assigning any reason and shall bear no liability whatsoever consequent upon such a decision.

ii) Notwithstanding anything stated above, SJVN reserves the right to assess the Bidder's capability and capacity to perform the contract satisfactorily, should the circumstances warrant such assessment in the overall interest of SJVN.

iii) The above-mentioned requirements are minimum and the SJVN Ltd. reserves the right to ask for any additional information.

3.4 Even though the bidders meet the above qualifying criteria, they are subject to be disqualified if they have made misleading or false representations in the forms, statements, declarations and attachments submitted in proof of the qualification requirements.

4. Cost of Bidding

The Bidder shall bear all costs associated with the preparation and submission of his Bid, and the Employer will, in no case, be responsible or liable for those costs.

5. Site Visit

5.1 The Bidders, in their own interest and at his expense**,** should inspect and examine the site and its surroundings and satisfy themselves, before submitting their tender, in respect of the site conditions including but not restricted to the following which may influence or affect the work or cost thereof under the Contract:

a) Site conditions including access to the site, existing and required roads and other means of transport/ communication for use by them in connection with the works;
b) Requirement and availability of land and other facilities for their enabling works, colonies, stores and workshops etc.;
c) Ground conditions including those bearing upon transportation, disposal, handling and storage of materials required for the work or obtained there from;
d) Source and extent of availability of suitable materials including water, etc. and labour (skilled and un-skilled), required for work and Laws and Regulations governing their use and employment;
e) Geological, meteorological, topographical and other general features of the site and its surroundings as are pertaining to and needed for the performance of the work;
f) The limit and extent of surface and sub-surface water to be encountered during the performance of the work and the requirement of drainage and pumping;
g) The type of equipment and facilities needed, preliminary to, for and in the performance of the work; and
h) All other information pertaining to and needed for the work including information as to the risks, contingencies and other circumstances which may influence or affect the work or the cost thereof under this contract.

5.2 The Bidders should note that information, if any, in regard to the site and local conditions, in these tender documents has been given merely to assist the Bidders and is not warranted to be complete.

5.3 The Bidders should note and bear in mind that the Employer shall bear no responsibility for the lack of acquaintance of the site and other conditions or any information relating thereto, on their part. The consequences of the lack of any knowledge, as aforesaid, on the part of the Bidders shall be at their risk and cost and no charges or claims whatsoever consequent upon the lack of any information, knowledge or understanding shall be entertained or payable by the Employer.

B. Bidding Documents

6. Content of Bidding Documents

The set of bidding documents comprises the documents listed below and addendum issued in accordance with Clause 8 of ITB.

Volume-I	
Section- I	Press notice and Notice Inviting e-Tender (NIT)
Section- II	Instructions to Bidders (ITB)
Section- III	Tender Form, Form of Declaration, Qualification Information and Schedules
Section- IV	General Conditions of Contract (GCC)
Section- V	Forms of Bank Guarantees & Proforma for Agreement etc.
Section- VI	Special Terms and Conditions
Section- VII	Bill of Quantities (BOQ)
Volume-II	
1	Scope of Work
2	Specifications
3	Safety Code
4	List of Approved Makes of Building Materials
5	Tender Drawings

6.2 The bidder is expected to examine carefully all instructions, Forms, Bill of Quantities, qualification information and other schedules, General and Special conditions of contract, specifications, and drawings in the Tender Document. Failure to comply with the requirements of Tender Documents shall be at the bidder's own risk. Pursuant to clause 22 hereof, bids, which are not substantially responsive to the requirements of the Tender Documents, shall be rejected.

7. Clarification of Bidding Documents and Pre-bid Meeting

7.1 A prospective Bidder requiring any clarification of the bidding documents may notify the Employer in writing (via letter, fax or e-mail) at the Employer's address indicated in the Notice Inviting Tenders. The Employer will respond to any request for clarification received earlier than 15 days prior to the deadline for submission of bids. Copies of the Employer's response will be forwarded to all purchasers of the bidding documents, including a description of the enquiry, but without identifying its source.

7.2 If a pre-bid meeting is to be held, the bidder or his authorized representative is invited to attend it, its date, time and address are given in the Notice Inviting Tender (NIT).

7.3 The purpose of the meeting will be to clarify issues and to answer questions on any matter that may be raised at that stage.

7.4 The bidder is requested to submit any questions in writing so as to reach the Employer not later than one week before the meeting.

7.5 Any modifications in the Tender documents listed in Clause 6.1 of ITB, which may become necessary as a result of the pre-bid meeting shall be made by the Employer exclusively through the issue of an Addendum/amendment/corrigendum pursuant to Clause 8 of ITB.

7.6 Non-attendance at the pre-bid meeting will not be a cause for disqualification of a bidder.

8. Amendment of Bidding Documents

8.1 At any time before the deadline for submission of bids, the Employer may modify the bidding documents by issuing an amendment/addendum/corrigendum(s) and such amendment/addendum/corrigendum(s) to the Tender document shall be available only on following websites:

A www.sjvn.nic.in
B www.eprocure.gov.in
C **https://etender.sjvn.co.in**

As such the Bidders are advised to visit the above websites regularly before deadline for submission of Bid.

8.2 Any amendment/addendum/corrigendum thus issued shall be part of the bidding documents

8.3 To give prospective bidders reasonable time in which to take an addendum into account in preparing their bids, the Employer shall extend, as necessary, the deadline for submission of bids, in accordance with Clause 18 of ITB.

C. Preparation of Bids

9. Language of Bid

All documents relating to the Bid shall be in English language.

10. Documents Comprising the Bid

10.1 The Bid submitted by the Bidder shall comprise the following documents:

a) Documents submitted in Physical Form in accordance with Clause 17.1 of ITB, and
b) Documents uploaded through E-mode, in accordance with Clause 17.2 of ITB.

10.2 The Bidder shall treat the Bidding Documents and contents thereof as confidential.

10.3 The Bidder shall download the following documents and upload the scanned copies of same after duly filled in & signed:-

S. No.	Description of Documents	Name of File to be uploaded on the portal
1.	Tender Form	tenderform.pdf
2.	Form of Declaration	formofdeclaration.pdf
3.	Qualification Information	qualification information.pdf
4.	Schedule A, B	scheduleab.pdf

11. Bid Prices

11.1 The Contract shall be for the whole Works, as described in Clause 1.1 of ITB, based on the priced Bill of Quantities submitted by the Bidder.

11.2 The tenders are invited on percentage rate method. Percentage rate method requires that the item descriptions, units, quantities, rate and amount of all items of BOQ are pre-filled by Employer and the bidder shall quote only one percentage figure (upto two decimal places) below/at par/ above the total estimated cost of tendered work and such percentage figure shall apply for all items of BOQ uniformly. For example, if a bidder has quoted 5%, the same shall be considered as 5.00%. At par bid will be considered for an amount equivalent to estimated amount (BOQ rates) provided by the Employer and breakup will be as per Annexure-A only.

11.3 All duties, taxes, royalties, cess and other levies payable under the Contract, or for any other cause, as applicable 28 days prior to deadline for submission of Bid, shall be deemed to be included in the rates, provided in the BOQ.

12. Currencies of Bid

The rates and the prices shall be quoted by the bidder entirely in Indian Rupees.

13. Bid Validity

13.1 Bids shall remain valid for a period of One hundred eighty **(180) days** from the date of opening of bids.

13.2 In exceptional circumstances, prior to expiry of the original time limit, the Employer may request that the bidders may extend the period of validity for a specified additional period. The request and the bidders' responses shall be made through post/e-mail. A bidder may refuse the request without forfeiting his Earnest Money. A bidder agreeing to the request will not be required or permitted to modify his bid, but will be required to extend the

validity of his earnest money for a period of the extension, and in compliance with Clause 14 of ITB in all respects.

14. Earnest Money

14.1 The Bidder shall furnish, as part of the Bid, Earnest Money Deposit (EMD), for the amount specified in the NIT/Schedule-B through either of the following modes :

a. Through NEFT/RTGS as per the procedure of payment mentioned in Section-I.
b. FDR/TDR : In the form of FDR/TDR pledged to SJVN Ltd. from any Indian nationalized bank/scheduled bank in India.
c. Bid securities shall remain valid for a period of 45 days, beyond the original validity period of the bid or beyond any period of extension subsequently requested under sub-clause 13.2.
d. EMD of the bidder(s) will be refunded only to designated account submitted by the bidder at the time of registration with SJVN irrespective of mode of payment made.

14.2 **Being work tender MSEs/NSIC/Startup India registered firms are not exempted from the submission of Cost of Tender Document & Earnest Money Deposit/Bid Security.**

14.3 Any bid not accompanied by an acceptable Earnest Money Deposit shall be declared by the Employer as non-responsive except 14.2 above.

14.4 The bid securities/EMD of unsuccessful bidders shall be returned within thirty (30) days after the declaration of result of 1st stage i.e technical evaluation.

14.5 The EMD of the successful bidder shall be retained as contract security until such period the contractor furnishes the required security deposit and shall be released within 30 days from the receipt of the performance security & verification/confirmation thereof.

14.6 The Earnest Money may be forfeited/ necessary action may be taken as per bid security declaration submitted by the firm along with their bid:

a) if the Bidder withdraws the Bid or varies any terms & conditions in regard thereto after bid opening (technical bid) during the period of Bid validity; **Or**

b) if the bidder does not accept the correction of bid price pursuant to clause 23 of ITB. **Or**

c) if the Bidder adopts corrupt or fraudulent practices **Or**

d) in the case of a successful Bidder, if the Bidder fails within the specified time limit to

i. sign the Agreement; and/or
ii. Furnish the required Performance Security Deposit.

14.7 No interest shall be paid by Employer on Earnest Money Deposit.

14.8 The bid security/ EMD and bid security exemption certificates shall remain valid for a period of 45 days beyond the original bid validity period and any extension subsequently requested. If the Bid security/ Exemption certificate is not found valid for 45 days beyond the original

bid validity period and any extension subsequently requested, SJVN may ask the bidder to extend the validity of the Bid security/ Exemption certificate for a period up to 45 days beyond the original validity period and any extension subsequently requested or else submit the EMD/ Bid security. Such EMD/ bid security shall be sent as per clause no. 14.2 & 14.5 as above and the same should submitted within ten (10) days from the date of SJVN's clarification.

15. Alternative Proposals by Bidders

Bidders shall submit offers that comply with the requirements of the bidding documents, including the Bill of Quantities and the basic technical design as indicated in the drawings and specifications. Alternative proposal will be considered as non-responsive and rejected out rightly.

16. Format and Signing of Bid

16.1 The Bidder shall submit/ upload the bid comprising of the documents as described in Clause 10 of ITB.

16.2 The Bid should be signed/uploaded by legally authorized signatory only under his own DSC.

a) If the tender is **submitted by an individual**, it shall be signed by the proprietor above his full name and name of the firm with its current business address.

b) If the tender is **submitted by a proprietary firm**, it shall be signed by the proprietor above his full name and full name of the firm with its current business address.

c) If the tender is **submitted by a firm in partnership**, it shall be signed by a partner holding the power of attorney for the firm for signing the tender, in which case a certified copy of the power of attorney shall accompany the tender. A certified copy of the partnership deed duly registered and current business address of all the partners of the firm shall also accompany the tender.

d) If the tender is **submitted by a limited company or a limited corporation**, it shall be signed by a duly authorized person holding the power of attorney or any other legally valid document for signing the tender, in which case a certified copy of the power of attorney or any such legally valid document shall accompany the tender.

e) All witnesses shall be persons of status and their full names, occupations and addresses shall be stated below their signatures.

D. Submission of Bids

***17.* Submission of Documents comprising the Bid**

17.1 **Submission of Documents in Physical Form**

The bidder shall submit the Technical and financial bid through e-mode. However, the Bidder shall also upload the scanned copies of the following documents along with technical bid through e-mode. The original of the same shall have to be submitted by the deadline of submission of physical documents indicated in the NIT in a sealed envelope through post / courier or by hand on the address of **HOD (P&C), NJHPS, SJVN Ltd., Jhakri, tehsil**

Rampur Bsr., Distt. Shimla (HP)-172201, failing which the financial bid will not be opened :

I. Original FDR/TDR in case EMD has not been paid through e-mode.

NOTE: The original documents in physical form submitted after the period as specified in NIT shall not be entertained and such bids shall be treated as late bids. If the original documents in physical forms are found to be at variance than the scanned copies submitted earlier alongwith e-bids, the bids will be treated as non-responsive.

17.2 **Submissions of Documents through E-Mode**

The following documents duly digitally signed by the person authorized to sign the Bid shall be uploaded on SJVN's E-tender portal, **https://etender.sjvn.co.in**

Part I "Technical Bid"

I. Tender Form,
II. Form of Declaration,
III. Qualification information, other schedules and supporting documents, as specified in Clause 3 of ITB.
IV. Any other information/documents required to be completed and submitted by bidders, as specified in the ITB.

(*No material/information relating to Price Bid shall be included in the Technical Bid. A technical bid containing any information related to price bid may be declared non-responsive).*

Part II. "Financial Bid"

The price is to be filled in ONLINE Dynamic schedule. The price quoted by the bidder only in the dynamic schedule shall be considered for price bid evaluation.

.

(No material/information relating to any technical matters shall be included in the Price Bid).

18. Deadline for Submission of Bids

18.1 Complete Bids (Documents in Physical form and Technical & Financial Bid through e-mode) must be submitted/ uploaded by the bidder not later than the date and time indicated in the NIT.

18.2 The Employer may, in the exceptional circumstances and at its discretion, extend the deadline for submission of bids by issuing an amendment/addendum in accordance with Clause 8 of ITB, in which case all rights and obligations of the Employer and the bidders previously subject to the original deadline will then be subject to the new deadline.

19. Late Bids

Online submission of the bid will not be permitted on the portal after expiry of submission time and the bidder shall not be

permitted to submit the same by any other mode. Similarly hard copies of the Off line documents, if received by the Employer after the deadline for submission of Bids prescribed in NIT, then it will be considered as 'Late Bid' notwithstanding the fact that the bidder has uploaded the bid online within the stipulated deadline. In such a case, the uploaded online bid on the portal shall be considered as non-responsive and shall not be processed further.

E. Bid Opening and Evaluation Procedure

20. Bid Opening

20.1 The Employer will open the bids in the presence of the bidders' designated representatives who choose to attend at the time, date and place specified in the NIT. The Bidder representatives who are present shall sign a register evidencing their attendance.

20.2 The amount of Earnest Money and form shall be announced. Thereafter, the bidders' names and such other details as the Employer may consider appropriate, will be announced by the Employer at the opening

20.3 Evaluation of the technical bids with respect to Earnest Money Deposit, qualification information and other information furnished in Part I of the bid in pursuant to Clause 10.1 of ITB, shall be taken up and a list will be drawn up of the responsive bids whose financial bids are eligible for consideration.

20.4 After the process of Technical evaluation is over, the employer shall notify the technically responsive bidders regarding date & time of opening of Financial bid through e-mail.

20.5 At the time of the opening of the 'Financial Bid', the names of the bidders whose bids were found responsive in accordance with clause 20.4 of ITB will be announced. The financial bids of only those bidders will be opened on E-mode. The responsive bidders' names, the Bid prices, the total amount of each bid, and such other details as the Employer may consider appropriate will be announced by the Employer at the time of bid opening.

21. Process to be Confidential

Information relating to the examination, clarification, evaluation, and comparison of bids and recommendations for the award of a contract shall not be disclosed to bidders or any other persons not officially concerned with such process. Any attempt by a Bidder to influence the Employer's processing of bids or award decisions may result in the rejection of his Bid.

22. Examination of Bids and Determination of Responsiveness

22.1 During the detailed evaluation of "Technical Bids", the Employer will determine whether each Bid:

(a) meets the eligibility criteria defined in Clauses 2 and 3;

(b) has been properly signed;

(c) is accompanied by the required securities; and

(d) is substantially responsive to the requirements of the bidding documents. During the detailed evaluation of the "Financial Bids", the responsiveness of the bids will be further determined with respect to the remaining bid conditions, i.e., priced bill of quantities, technical specifications and drawings.

22.2 A substantially responsive "Bid" is one which conforms to all the terms, conditions, and specifications of the bidding documents, without material deviation or reservation. A material deviation or reservation is one :

(a) which affects in any substantial way the scope, quality, or performance of the Works;
(b) which limits in any substantial way, the Employer's rights or the Bidder's obligations under the Contract; or
(c) whose rectification would affect unfairly the competitive position of other bidders presenting substantially responsive bids or
(d) which is inconsistent with the bidding documents,

22.3 During the evaluation of bids, the following definitions apply :
a) "Deviation" is a departure from the requirements specified in the Bidding Document;
b) "Reservation" is the setting of limiting conditions or withholding from complete acceptance of the requirements specified in the Bidding Document; and
c) "Omission" is the failure to submit part or all of the information or documentation required in the Bidding Document.

22.4 If a "Bid" is not substantially responsive, it will be rejected by the Employer, and may not subsequently be made responsive by correction or withdrawal of the nonconforming deviation or reservation.

23. Correction of Errors (Applicable to extent possible).

The prices are to be filled in ONLINE DYNAMIC Schedules as under:-

A. The bidder has to fill the Unit Rates in %age only after selecting at par/above/below option up to 2 decimal places.

B. The entered %age in figures shall be automatically converted in to total amount.

24. Evaluation and Comparison of Bids

24.1 The Employer will evaluate and compare only the bids determined to be substantially responsive in accordance with Clause 22 of ITB.

24.2 In evaluating the bids, the Employer will uniformly apply the percentage quoted by the bidder on all items of BOQ to determine the evaluated Bid price for each Bid.

24.3 The successful bidder shall be the one whose evaluated Bid price is lowest on overall basis if considered reasonable at the sole discretion of Employer.

24.4 Employer's decision for award of Contract shall be final and binding on all the bidders.

25. Purchase Preference: Not Applicable

F. Award of Contract

26. Award Criteria

Subject to Clause 28 of ITB, the Employer will award the Contract to the Bidder whose Bid has been determined to be substantially responsive to the bidding documents and who has offered the lowest evaluated Bid price on overall basis pursuant to clause 24 of ITB, provided that such Bidder has been determined to be (a) eligible in accordance with the provisions of Clause 2 of ITB, and (b) qualified in accordance with the provisions of Clause 3 of ITB; and (c) the evaluated Bid Price is within a reasonable variation of the estimated cost of tendered Works.

27. Employer's Right to Accept any Bid or Reject any or all Bids

Notwithstanding Clause 26 above, the Employer reserves the right to accept or reject any bid, and to cancel the bidding process and reject all bids, at any time prior to the award of Contract, without thereby incurring any liability to the affected bidder or bidders or any obligation to inform the affected bidder or bidders of the grounds for the Employer's action.

28. Notification of Award and Signing of Agreement.

28.1 The bidder whose bid has been accepted will be notified of the award by the Employer prior to expiration of the Bid validity period through the "Letter of Acceptance", which will state the sum that the Employer will pay to the Contractor in consideration of the execution, completion by the Contractor as prescribed by the Contract.

28.2 The notification of award will constitute the formation of the Contract until the Formal Agreement is signed pursuant to clause 28.3 of ITB and further subject only to the furnishing of a performance security deposit in accordance with the provisions of Clause 29 of ITB.

28.3 The Agreement will incorporate all agreements between the Employer and the successful bidder. It will be signed by the Employer and the successful bidder after the performance security deposit is furnished, but not later than 30 (thirty) days after issuance of letter of Acceptance.

28.4 The Intending Tenderer must have their GST No., PAN, EPF Code etc. and the bidders shall have to upload the same along with their Techno-Commercial bid.

29. Performance Security Deposit

29.1 The Contractor within 28 (Twenty Eight) days from the date of issuance of Letter of Acceptance, shall furnish to the Employer a **Performance security deposit of 3% (Three percent)** of the Contract Price.

29.2 The Performance Security Deposit shall be in the form of irrevocable, valid and fully enforceable Bank Guarantee in favour of SJVN Ltd. in the form prescribed from a Nationalized / Scheduled Bank of India acceptable to SJVN or in the form of a FDR pledged to SJVN Ltd. issued by a Nationalized/ Scheduled Indian Bank located in India acceptable to SJVN and shall valid till 45 (Forty five) days beyond Defect Liability Period.

29.3 The original BG against Performance Security Deposit should be sent by the Bank to SJVN Ltd. directly under Regd. Post (A.D.). However, in exceptional cases, where the original BG against Performance Security Deposit is handed over to the bidder by the issuing bank/branch, the bidder shall ensure that an un-stamped duplicate copy of the BG against Performance Security Deposit has been sent immediately by the issuing bank/branch under Regd. Post (A.D.) directly to SJVN Ltd with a covering letter to compare with original BGs and confirm that it is in order.

29.4 Failure of the successful Bidder to comply with the requirements of Clause 29.1 shall constitute sufficient grounds for cancellation of the award and forfeiture of the Earnest Money. He will also be debarred from participating in bids invited by the Project for one year.

29.5 The interest *shall be charged on delay period for breach in timely submission of CPG/Initial security deposit without prejudice to right of SJVN to other remedies available under the contract. <u>The GST shall be levied and recovered extra on interest as per applicable rule of GST.</u>

** Interest shall be chargeable on per the day basis on the amount of CPG/PSD@SBI MCLR as on date of bid submission specified in the tender document +200 basis point*

<u>Note :-In case last day of submission of performance security happens to be a bank holiday the last day of submission shall be next working day.</u>

29.6 In case CPG is submitted by way of Bank Guarantee; while issuing the physical BGs, the Supplier's/contractor's Bank shall also send electronic message through secure SFMS to Employer's/Buyer's Beneficiary Bank whose details are provided as below.

Beneficiary Name:	SJVN LTD O AND M ACCOUNT, Payable at SBI Jhakri
Account No:	11543142129
IFSC Code:	SBIN0006988
Bank Branch:	SBI Jhakri

30. Procurement of Goods/Services/Works from Local Suppliers under

Public Procurement (Preference to Make in India), 2017 and revised PPP MII order, dated 16-09-2020 and MOP orders dated 20-12-2018 & 28-07-2020.

DPIIT issued PP (PMI) Order 2017 for encouraging Make in India and promoting domestic manufacturing. Pursuant to DPIIT orders, MOP notified in December, 2018 Purchase Preference (Linked with local content) for Thermal, Hydro and Transmission Sub-sectors and for distribution sector vide order dated 17.03.2020. DPIIT issued a revised PPP MII order, dated 16-09-2020 and MOP orders dated 20-12-2018 & 28-07-2020.

Local Content:-'Local Content' means the amount of value added in India which shall, unless otherwise prescribed by the Nodal Ministry, be the total value of the item procured (excluding net domestic indirect taxes) minus the value of imported content in the item (including all custom duties) as a proportion of the total value, in percent.

Class-I local supplier:- 'Class-I local supplier' means a supplier or service provider, whose goods, services or works offered for procurement , has minimum 50% local content, as defined in DPIIT order dated 16-09-2020.

(i) In line with the DPIIT PPP-MII order dated 16.09.2020 and MOP orders dated 20.12.2018 & 28.07.2020, "Only Class-I Local Supplier" shall be eligible to bid in this tender and the bidder

shall upload the Self-Certification as per Annexure-D, certifying that the item offered meets the Local Content requirement for Class-I Local Supplier, on letter Head of Firm.

(ii) "Self-declarations/ auditor's/ accountant's certificates submitted by the manufacturer/ supplier may be verified randomly by the committee constituted as per MOP Order 28-07-2020. In case of false documents/misrepresentation of the facts requisite action against such manufacturer/ supplier will be taken based on the recommendation of the Committee".
and further legal action shall be taken in accordance with law.

31. Corrupt or Fraudulent Practices

It is expected from the bidders/Contractor and/or any of its personnel, or its agents, or its Sub-contractors, manufacturer, sub-consultants, services providers, suppliers and/or their employees that they will observe the high standard of ethics during the bidding process and execution of such Contracts. In pursuance to this policy:

a) *For the purpose of this provision, the terms set-forth below shall mean as under:*

i) *"Corrupt practice" means the offering, giving, receiving or soliciting of anything of value to influence the action of a public official in the procurement* process *or in Contract execution.*

ii) *"fraudulent practice"* means *a misrepresentation or omission of* facts *in order to influence* a *procurement process or the execution of a contract to be detriment of the Employer, and includes collusive practice among Applicants (prior to or after bid submission)*

designed to establish bid prices at artificial non-competitive levels and to deprive the Employer of the benefits of free and open competition.

b) A *Bid shall be rejected by the Employer if it is determined at any* stage *that respective bidders / Contractor and/or any of its personnel, or its agents, or its Sub-contractors, manufacturer, sub-consultants, services providers, suppliers and/or their employees has engaged in corrupt or fraudulent or collusive practices in competing for the Contract in question.*

i) *The Employer will declare* a *bidder/contractor ineligible or* may *terminate the contract, either indefinitely or for a stated period of time, to be awarded* a *Contract if it at any time* determines that the bidders*/Contractor and/or any of its personnel, or its* agents *or its* Sub-contractors, manufacturer, sub-consultants, services providers, suppliers and/or their employees has *engaged In corrupt or fraudulent or collusive practices In competing for or in* executing the Contract In question.

b) *All the bidders/service providers/vendors /consultants etc shall be requested to furnish a certificate regarding presentation and detection of fraud as per* ***Annexure-C along with Annexure-II (Guidelines on Banning of Business Dealing)***

G. Adoption of Integrity Pact (Not applicable)

32. Integrity Pact (Not applicable)

To improve transparency and fairness in the tendering process the Employer is implementing Integrity Pact. Integrity Pact is deemed as part of the contract so that the prospective bidders are bound by its provisions.

The Integrity Pact, signed by all the prospective Bidders and the Employer, shall commit the persons/officials of both the parties, not to exercise any corrupt /fraudulent/collusive/coercive practices in the Tendering process and also during implementation of the Contract. Only those Bidders who have entered into Integrity Pact with the Employer shall be eligible to participate in the bidding process. Bidders signing Integrity Pact shall not approach the Courts while representing the matters to IEMs and he/she will await their decision in the matter.

Entering into Integrity Pact as per Performa (enclosed in **ANNEXURE-L**) is a basic qualifying requirement. In case of JV, each partner of JV shall sign Integrity Pact with the Employer. In case of sub-contracting, the Principal contractor shall be responsible for adoption of Integrity Pact by the sub-contractor.

To oversee the compliance of obligation under the Integrity Pact, a panel of Independent External Monitor(s) (IEMs) have been appointed by concerned authority. The Contact address of IEMs is as under:

1. Sh. Devendra Verma , ISS (Retd.)
   604, Tower-14, Purvanchal Royal City, Chi V,

Greater Noida, G.B. Nagar(UP)-201310
Email: verma.davendra@gmail.com

2. Sh. Prashanta Kumar Agrawal, IPS (Retd)
House no. 762, Sector-17,
Faridabad (HR)- 121002
Email: agrawal.prashanta@gmail.com

3. Shri Sanjay Kumar Srivastava, IAS (Retd.),
C-2 Flat No. 2475, Vasant Kunj,
(Opposite DPS School) Vasant Kunj New Delhi-110070
Email: - srivastava.sk001@gmail.com

All pages of the Integrity pact to be signed between SJVN Ltd. and the bidders / contractors on plain papers at the time of submission of bid as per the approved format. The Integrity Pact shall be duly signed on behalf of the employer (SJVN Ltd.) is given in forms & procedure of these bid documents. Signed copy of the Integrity Pact is to be included in the bid document while issuing Tender Document / uploading the tender documents on the Portals. The integrity pact shall be downloaded, printed and signed by bidder on each page. The scanned copy of duly signed Integrity Pact shall be uploaded by the bidder along with the bid.

Further following may also be noted:-

IP is deemed as part of the contract so that the parties concerned are bound by its provisions.

Failure to sign the integrity pact by applicant shall be liable to outright rejection of application / bid.

The successful bidder (Contractor) shall submit duly executed Integrity Pact on Non-judicial Stamp Paper of Rs 100/- within 15 days from the date of issue of LOA.

33. RESTRICTIONS IMPOSED BY GOVT OF INDIA:

Any bidder from a country which shares a land border with India will be eligible to bid in this tender only if the bidder is registered with the Competent Authority specified in Annexure-I of Ministry of Finance, Government of India order no F. No. 6/18/2019-PPD dated 23.07.2020 and various amendment/clarification issued in this regard. The bidders for the purpose of compliance and its procedure for registration from Competent Authority etc. The bidder has to submit the undertaking as per **Annexure-H (enclosed**) regarding compliance of above-mentioned order. In case the undertaking given by the bidder whose tender has been accepted by the Employer is found false at the later stage, this would be a ground for immediate termination

SECTION III

- **TENDER FORM**
- **FORM OF DECLARATION**
- **QUALIFICATION INFORMATION**
- **SCHEDULES**
- **UNDERTAKING REGARDING BLACKLISTING**

TENDER FORM - PCD - 2977(Civil)/2026

To
The HOD (P&C),
NJHPS, SJVN Ltd., Jhakri,
Tehsil Rampur Bsr., Distt. Shimla (HP)-172201

We have read and examined the following tender documents relating to **"Repair/Strengthening of Approach Road from Steel Bridge to Dam Top on Right Bank (RD 0.00 m to 1500.00 m) at NJHPS Nathpa " PCD - 2977(Civil)/2026).**

Volume-I
Sections
I Notice Inviting Tender
II Instructions to Bidders
III Tender Forms, Form of Declaration, Qualification information, Schedules, Integrity Pact, Undertaking regarding Blacklisting
IV General Conditions of Contract and Contract Data
V Forms for Deeds of Guarantees and Proforma for Agreement
VI Special Terms and Conditions
VII Bill of Quantities
Annexures

Volume-II
1 Scope of Work
2 Specifications
3 Safety Code
4 List of Approved Makes of Building Materials
5 Tender Drawings

1. We hereby tender for execution of the work referred to in the documents mentioned in paragraph one above upon the terms and conditions contained or referred to in the aforesaid documents and in accordance in all respects with the specifications, designs, drawings and other details given herein and at the rates contained in BOQ and within the period(s) of completion as given in Schedule-B and subject to such terms and conditions as stipulated in the enclosed tender documents.

2. We agree to keep this tender open for acceptance for 180 days from the date of opening of bids and also agree not to make any modifications in its terms and conditions on our own accord.

3. A sum of **₹ 273419 /- (Rupees Two Lakh Seventy Three Thousand Four Hundred Nineteen Only)** as Earnest Money has been paid as per the procedure mentioned in Section-I of Tender Document or is hereby enclosed as scanned copy of FDR/TDR pledged to SJVN. In case of FDR/TDR, the original of same shall be submitted as per deadline specified in NIT.

We agree that if we fail to keep the validity of tender open, as aforesaid, or make any modification in the terms and conditions of our tender on our own accord and/or fail to commence the execution of the works as provided in the documents referred to in paragraph-1 above, after the acceptance of our tender, we shall become liable for forfeiture of our earnest money, as aforesaid, and the Employer shall without prejudice to any other right or remedy, be at liberty to forfeit the said earnest money absolutely/ necessary action may be taken as per bid security declaration submitted by the firm along with their bid.

Should this tender be accepted, we agree to abide by and fulfil all the terms and conditions and provisions of the above mentioned tender documents.

We certify that the Tender submitted by us is strictly in accordance with the terms, conditions, specifications etc. as contained in your Tender Documents, referred to in paragraph-1 above, and it does not contain any deviations to the aforesaid documents. It is further certified that information furnished in the Tender submitted by us correct to the best of our knowledge and belief.

(Signature of person duly authorised to sign the Tender on behalf of the bidder along with Seal of Company)

Witness:

Name_____

Signature_____ Designation_____

Date_____ Name of Company_____

Name & Address_____
_____
_____ Date: _____

Postal Address_____ _____

Telegraphic Address:_____ _____

Telephone No._____ Telex No._____

Fax No._____ e-mail _____

FORM OF DECLARATION - PCD - 2977(Civil)/2026

M/s----------(*name of Bidder*) having its registered office at ---------- (hereinafter referred to as `the Bidder') having carefully studied all the Tender documents, specifications, drawings, etc. pertaining to the Work for **"Repair/Strengthening of Approach Road from Steel Bridge to Dam Top on Right Bank (RD 0.00 m to 1500.00 m) at NJHPS Nathpa ". (PCD-2977(Civil)/2026)** the local and site conditions and having undertaken to execute the said works.

DO HEREBY DECLARE THAT:

1. The Bidder is familiar with all the requirements of the Contract.
2. The Bidder has not been influenced by any statement or promise of any person of the Employer but only the Contract Documents.
3. The Bidder is financially solvent.
4. The Bidder is experienced and competent to perform the Contract to the satisfaction of Employer.
5. The Bidder is familiar with all general and special laws, acts, ordinances, rules and regulations of the Municipalities, District, State and Central Government of India that may affect the work, its performance or personnel employed therein.
6. The Bidder undertakes to abide by all labour welfare legislations.
7. The Bidder undertakes that the information furnished in the Bid is true and correct in all respects.
8. The Bidder undertakes that all the documents uploaded along with the NIT have been read and there is no deviation from the standard terms and conditions of the tender document including Corrigendum/Addendum (if any).

Date: **For and on behalf of the bidder**

.....

(**Signature of authorized representative of the Bidder, along with his name, Seal of Company**)

QUALIFICATION INFORMATION -PCD - 2977(Civil)/2026

Notes on Form of Qualification Information

The information to be filled in by bidders in the following pages will be used for purposes of qualification as provided for in Clause 3 of the Instructions to Bidders *(ITB)*. This information will not be incorporated in the Contract. Attach additional pages as necessary.

1. Individual Bidders

<table>
<tr><td>1.1</td><td>Constitution or legal status of Bidder [attach copy]
Place of registration:

Principal place of business:

Power of attorney or any other legally valid document with regard to authenticity of signatory of Bid</td><td><u>[To be filled in by the bidder]</u></td></tr>
<tr><td>1.2</td><td>Average Annual Financial Turnover (as per clause 3.3 of ITB) is ₹ 41,01,288/- (₹ Forty One Lakh One Thousand Two Hundred Eighty Eight only)</td><td><table><tr><th>Financial Year</th><th>(Turnover ₹ In lakhs)</th></tr><tr><td>2023-24</td><td></td></tr><tr><td>2024-25</td><td></td></tr><tr><td>2025-26</td><td></td></tr></table>Average Annual Turnover for Last three (03) years = {To be filled by the bidder}.</td></tr>
<tr><td rowspan="2">1.3</td><td>a. PAN [attach copy]</td><td><u>[To be filled in by the bidder]</u></td></tr>
<tr><td>b. GST Number [attach copy]</td><td><u>[To be filled in by the bidder]</u></td></tr>
<tr><td>1.4</td><td colspan="2">the bidder as sole contractor or partner of a Joint venture or sub-contractor approved by the employer should have experience of executing at least one similar work of value not less than ₹ 68,35,480/- (Rupees Sixty Eight Lakh Thirty Five Thousand Four Hundred Eighty only) in the preceding 07 years. Experience certificate and work order from employer should be submitted along with the bid to substantiate the experience in all cases. In case evidence of work experience against QR is issued by non-governmental organization; copy (ies) of the TDS for the same contract is required to be submitted by the bidder.</td></tr>
</table>

[To be filled in by the bidder]

Project Name	Name of Employer	Description of work	Value of contract	Contract No.	Date of Issue of Work Order	Stipulated Date of Completion	Actual Date of Completion	Remarks explaining reasons for Delay, if any

1.5 Duly certified financial reports for the last three financial years ending 31.03.2026 i.e. balance sheets, profit and loss statements (attach copies).

1.6 The proposed methodology and program of construction, backed with equipment and material planning and deployment, duly supported with broad calculations , justifying their capability of execution and completion of the work as per technical specifications and within the stipulated period of completion in pursuant to Clause 3.2 of the ITB.

SCHEDULE-A –

SCHEDULE FOR ACHIEVEMENT OF MAJOR MILESTONES OF WORKS AND COMPENSATION FOR DELAY

(Refer Clause-40 of General Conditions of Contract and Schedule-C)

Sl. No.	Description of works	Schedule completion period	Compensation for delay
1	**"Repair/Strengthening of Approach Road from Steel Bridge to Dam Top on Right Bank (RD 0.00 m to 1500.00 m) at NJHPS Nathpa".**	**Six (06) months**	**@0.035% of Contract Price per day of delay subject to a maximum of 10% (Ten percent) of Contract Price of Annexure-A.**

Note: The completion period shall be reckoned from the actual date of start of work but not later than 30 days from the date of issue of letter **of Award.**

SCHEDULE FOR CHARGEABLE INTEREST RATES AGAINST ADVANCES, COMPLETION TIME, DEFECT LIABILITY PERIOD, PERCENTAGES OF VARIOUS COMPONENTS FOR PRICE VARIATION/ADJUSTMENT

S. No.	Clause No.	Description	Stipulation
1	3.2 of GCC	Performance Security Deposit	3% of Contract Price
	3.4 of GCC	Retention Money	3% of Contract Price
2	6.2 of GCC	Number of Copies of Contract to be Furnished by the Contractor to the Employer.	Three (03)
3	13.1.1 of GCC	Mobilization Advance Limit	**Not applicable**
	13.1.1(ii) GCC	Initial limit of lump sum advance	**Not applicable**
	13.1.1(i) GCC	Simple interest per Annum on Mobilization Advance	**Not applicable**
4	13.1.2 GCC	Advance for Construction Equipment limited to	**Not applicable.**

	13.1.2(i) GCC	Simple interest per Annum on sum advanced for purchase of new equipment	**Not applicable.**
5	14 of ITB	Earnest Money Deposit	**₹ 273419**
6	11.2 of ITB	Tenders invited on	%age Rate Method
7	18.2(iii) of GCC	Contractor's Overheads, Profits and Supervision Charges.	15%
8	34.4 (a) GCC	An addition to Contract Price to account for the materials which is to be issued to the Contractor free of cost by the Employer	**Not applicable.**
9	34.4 (b) of GCC	Deductibles	5% of each loss subject to minimum of Rs 10,000/-.
10	34.8 GCC	Limit for Public Liability & Property Liability	10% of Contract Price**.**
11	39.1 of GCC	**Repair/Strengthening of Approach Road from Steel Bridge to Dam Top on Right Bank (RD 0.00 m to 1500.00 m) at NJHPS Nathpa as per Annexure- "A"**	**Six (06) months**
12	43 of GCC	Defect liability Period	**365 Days for Annexure-A**
13	45.7 of GCC	Interest Rate for Delayed Payment	8% Simple Interest per Annum
14	46 of GCC	Price Adjustment/ Variation	**Not Applicable**
		Index Code / **Index Description**	**Pre-determined Weightages**
		a / Non adjustable	a 0.15
		E / Fuel & Lubricant	b: ____
		M / Materials (Other than Cement, Steel and Fuel & Lubricant and Fuel & Lubricant and After due adjustment of any other materials forming part of escalation	c: ____

			under this clause.	
		C	Cement	d: ____
		S	Steel	e ____
		L	Labour Skilled	f: ____
		U	Labour Un-Skilled	g: ____

SCHEDULE – C

CONSTRUCTION SCHEDULE

(As per Schedule-A)

SCHEDULE –D - PCD - 2977(Civil)/2026

CONSTRUCTION PLANT, EQUIPMENT & MACHINERY AND ITS PLANNING SCHEDULE

[*To be filled in by the Bidder*]

Sl. No.	Name of Equipment	Make & Model	Capacity	Total No. of equipments	Source /sources of Mobilisation	Year of Purchase	Whether New /Old	Hours run	No. of overhauling already done	Proposed deployment for the work month wise phasing in accordance with constn. Schedule	Remarks
1	2	3	4	5	6	7	8	9	10	11	12

Note

1) The above schedule will be supplemented from time to time to achieve the required targets and as per directions of Engineer-in-charge.
2) Under the head "source/sources of mobilization", the Contractor would clearly indicate the source(s) of equipment and the time when it could be released from his existing works (s) / contract (s) for work (s) / contract (s) in question For the new equipments the Contractor would indicate the source of purchase and the likely delivery after placement of order.

SCHEDULE-E -PCD - 2977(Civil)/2026

LIST OF PLANT, MACHINERY & EQUIPMENT IMMEDIATELY AVAILABLE WITH THE CONTRACTOR FOR DEPLOYMENT ON THE WORKS

[To be filled in by the Bidder]

Sl. No.	Name of Machinery	Quantity	Description, size, capacity, model etc.	Condition	Year of Service	Present location

SCHEDULE-F -PCD - 2977(Civil)/2026

CONSTRUCTION METHODS

[To be filled in by the Bidder]

The Bidder shall submit the proposed methodology and program of construction, backed with equipment and material planning and deployment, duly supported with broad calculations, justifying their capability of execution and completion of the work as per technical specifications and within the stipulated period of completion.

To be executed on plain paper at the time of submission of bid and on legal paper of ₹ 100/- by successful bidder prior to signing of contract agreement

(Format of Integrity Pact) (Not applicable)

PRE CONTRACT INTEGRITY PACT (PCD-2977(Civil)/2026)

Between

SJVN Limited, a company incorporated under the relevant law in the matter and having its registered office at **SJVN Ltd., Corporate Head Quarter, Shanan, Shimla (H.P.)-171006**, hereinafter referred to as "The Employer" which expression shall mean and include, unless the context otherwise requires, his successors in office and assigns of the **First Part.**

And

M/s _____ , a company/ firm/ individual (status of the company) constituted in accordance with the relevant law in the matter and having its registered office at _____ represented by Shri _____, hereinafter referred to as "The Bidder/Contractor" which expression shall mean and include, unless the context otherwise requires, his successors and permitted assigns of the **Second Part**.

WHEREAS the Employer proposes to procure under laid down organizational procedures, contract/s for **"Repair/Strengthening of Approach Road from Steel Bridge to Dam Top on Right Bank (RD 0.00 m to 1500.00 m) at NJHPS Nathpa" (PCD-2977(Civil)/2026)"** of NJHPS, SJVN Ltd. Jhakri (Name of the works/ goods/ services) and the Bidder/Contractor is willing to offer against **PCD-2977(Civil)/2026**

NOW, THEREFORE,

To avoid all forms of corruption by following a system that is fair, transparent and free from any influence/prejudiced dealings prior to, during and subsequent to the currency of the contract to be entered into with a view to:-

Enabling the Employer to obtain the desired said (work/ goods/ services) at a competitive price in conformity with the defined specifications by avoiding the high cost and the distortionary impact of corruption on public procurement, and

Enabling the Bidder(s)/Contractor(s) to abstain from bribing or indulging in any corrupt practice in order to secure the contract by providing assurance to them that their competitors will also abstain from bribing and other corrupt practices and the Employer will commit to prevent corruption, in any form, by its officials by following transparent procedures.

1.0 Commitments of the Employer

1.1 The Employer undertakes that no official of the Employer, connected directly or indirectly with the contract, will demand, take a promise for or accept, directly or through intermediaries, any bribe, consideration, gift, reward, favour or any material or

immaterial benefit or any other advantage from the Bidder/Contractor, either for themselves or for any person, organization or third party related to the contract in exchange for an advantage in the bidding process, bid evaluation, contracting or implementation process related to the contact.

1.2. The Employer will, during the pre-contract stage, treat all the Bidders/Contractors alike, and will provide to all the Bidders/Contractors the same information and will not provide any such information to any particular Bidder/Contractor which could afford an advantage to that particular Bidder/Contractor in comparison to other Bidders/Contractors.

1.3. All the officials of the Employer will report to the appropriate Authority any attempted or completed breaches of the above commitments as well as any substantial suspicion of such a breach.

1.4 In case any such preceding misconduct on the part of such official(s) is reported by the Bidder to the Employer with full and verifiable facts and the same is prima facie found to be correct by the Employer, necessary disciplinary proceedings, or any other action as deemed fit, including criminal proceedings may be initiated by the Employer or Independent External Monitor and such a person shall be debarred from further dealings related to the contract process. In such a case while an enquiry is being conducted by the Employer the proceedings under the contract would not be stalled.

2.0 <u>Commitments of the Bidder(s)/Contractor(s)</u>

The Bidder(s)/Contractor(s) commits itself to take all measures necessary to prevent corrupt practices, unfair means and illegal activities during any stage of its bid or during any pre-contract or post-contract stage in order to secure the contract or in furtherance to secure it and in particular commit itself to the following :-

2.1 The Bidder(s)/Contractor(s) will not offer, directly or through intermediaries, any bribe, gift, consideration, reward, favour, any material or immaterial benefit or other advantage, commission, fees, brokerage or inducement to any official of the Employer, connected directly or indirectly with the bidding process, or to any person, organization or third party related to the contract in exchange for any advantage in the bidding, evaluation, contracting and implementation of the contract.

2.2 The Bidder/Contractor further undertakes that it has not given, offered or promised to give, directly or indirectly any bribe, gift consideration, reward, favour, any material or immaterial benefit or other advantage, commission, fees, brokerage or inducement to any official of the Employer or otherwise in procuring the Contract or forbearing to do or having done any act in relation to the obtaining or execution of the contract or any other contract with Employer for showing or forbearing to show favour or disfavour to any person in relation to the contract or any other contract with Employer.

2.3 The Bidder(s)/Contractor(s) shall disclose the name and address of agents and representatives and Indian Bidder(s)/Contractor(s) shall disclose their foreign principals or associates.

2.4 The Bidder(s)/Contractor(s) shall disclose the payments to be made by them to agents/brokers or any other intermediary, in connection with this bid/contract

2.5 The Bidder, either while presenting the bid or during pre-contract negotiations or before signing the contract, shall disclose any payments he has made, is committed to or intends to make to officials of the Employer or their family members, agents, brokers or any other intermediaries in connection with the contract and the details of services agreed upon for such payments.

2.6 The Bidder/Contractor will not collude with other parties interested in the contract to impair the transparency, fairness and progress of the bidding process, bid evaluation, contracting and implementation of the contract.

2.7 The Bidder/Contractor will not accept any advantage in exchange for any corrupt practice, unfair means and illegal activities.

2.8 The Bidder/Contractor shall not use improperly, for purposes of competition or personal gain, or pass on to others, any information provided by the Employer as part of the business relationship, regarding plans, technical proposals and business details, including information contained in electronic data carrier. The Bidder/Contractor also undertakes to exercise due and adequate care lest any such information is divulged.

2.9 The Bidder(s)/Contractor(s) commits to refrain from giving any complaint directly or through any other manner without supporting it with full and verifiable facts.

2.10 The Bidder(s)/Contractor(s) shall not instigate or cause to instigate any third person to commit any of the actions mentioned above.

2.11 If the Bidder/Contractor or any employee of the Bidder/Contractor or any person acting on behalf of the Bidder/Contractor, either directly or indirectly, is a relative of any of the officers of the Employer, or alternatively, if any relative of an officer of the Employer has financial interest/stake in the Bidder(s)/Contractor(s) firm(excluding Public Ltd. Company listed on Stock Exchange), the same shall be disclosed by the Bidder/Contractor at the time of filling of tender.

The term 'relative' for this purpose would be as defined in Section 2(77) of the Companies Act 2013.

2.12 The Bidder(s)/Contractor(s) shall not lend to or borrow any money from or enter into any monetary dealings or transactions, directly or indirectly, with any employee of the Employer.

2.13. The Bidder/supplier shall follow all rules and regulations of India including statutory requirements like minimum wages, ESIC and EPF.

3.0 <u>Previous Transgression</u>

3.1 The Bidder(s)/Contractor(s) declares that no previous transgression occurred in the last three years immediately before signing of this Integrity Pact, with any other company in

any country in respect on any corrupt practices envisaged hereunder or with any Public Sector Enterprise / Government Department in India.

3.2 The Bidder agrees that if it makes incorrect statement on this subject, Bidder can be disqualified from the tender process or the contract, if already awarded, can be terminated for such reason.

4.0 <u>Earnest Money (Security Deposit)</u>

The provision regarding Earnest Money/Security Deposit as detailed in the GeM Bid Document is to be referred.

5.0 <u>Sanctions for Violations</u>

5.1 Any breach of the aforesaid provisions by the Bidder/Contractor or any one employed by it or acting on its behalf shall entitle the Employer to take action as per the procedure mentioned in the "**Guidelines on Banning of Business Dealings**" attached as **Annex-A** and initiate all or any one of the following actions, wherever required:-

(i) To immediately disqualify the bidder and call off the pre contract proceedings without assigning any reason or giving any compensation to the Bidder/Contractor. However, the proceedings with the other Bidder(s)/Contractor(s) would continue.

(ii) The Earnest Money Deposit (in pre-contract stage) and/or Security Deposit/Performance Bond (after the contract is Signed) shall stand forfeited either fully or partially, as decided by the Employer and the Employer shall not be required to assign any reason thereof.

(iii) To immediately cancel the contract, if already signed, without giving any compensation to the Contractor. The Bidder/Contractor shall be liable to pay compensation for any loss or damage to the Employer resulting from such cancellation/rescission and the Employer shall be entitled to deduct the amount so payable from the money(s) due to the Bidder/Contractor.

(iv) To encash the Bank guarantee, in order to recover the dues if any by the Employer, along with interest as per the provision of contract.

(v) To debar the Bidder/Contractor from participating in future bidding processes of Employer, as per provisions of "Guidelines on Banning of Business Dealings" (**Annex-A**), which may be further extended at the discretion of the Employer.

(vi) To recover all sums paid in violation of this Pact by Bidder(s)/Contractor(s) to any middleman or agent or broker with a view to securing the contract.

(vii) In cases where irrevocable Letters of Credit have been received in respect of any contract signed by the Employer with the Bidder/ Contractor, the same shall not be opened/operated.

(viii) Forfeiture of Performance Security in case of a decision by the Employer to forfeit the same without assigning any reason for imposing sanction for violation of this Pact.

5.2 The Employer will be entitled to take all or any of the actions mentioned at para 5.1 (i) to (viii) of this Pact also on the Commission by the Bidder/Contractor or any one employed by it or acting on its behalf (whether with or without the knowledge of the Bidder/Contractor), of an offence as defined in GFR, Chapter IX of the Indian Penal Code, 1860 or Prevention of Corruption Act, 1988 or any other statute enacted for prevention of corruption in Employer's country.

5.3 The decision of the Employer to the effect that a breach of the provisions of this Pact has been committed by the Bidder / Contractor shall be final and conclusive on the Bidder / Contractor. However, the Bidder/Contractor can approach the Independent External Monitor(s) appointed for the purposes of this Pact.

6.0 <u>Independent External Monitor(s)</u>

6.1 The Employer has appointed Independent External Monitor(s) (hereinafter referred to as Monitors) for this Pact.

6.2 The task of the Monitors shall be to review independently and objectively, whether and to what extent the parties comply with the obligations under this Pact.

6.3 The Monitors shall not be subject to instructions by the representatives of the parties and perform their functions neutrally and independently.

6.4 Both the parties accept that the Monitors have the right to access all the documents relating to the project/procurement for which a complaint or issue is raised before them, including minutes of meetings. The right to access records should only be limited to the extent absolutely necessary to investigate the issue related to the subject tender/contract.

6.5 As soon as the Monitor notices, or has reason to believe, a violation of this Pact, he will so inform CMD/CEO/MD of Employer and request Employer to discontinue or take corrective action, or to take other relevant action. The Monitor can in this regard submit non-binding recommendations. Beyond this the Monitor has no right to demand from the parties that they act in a specific manner, refrain from action or tolerate action.

6.6 The Bidder(s)/Contractor(s) accepts that the Monitor has the right to access without restriction, to all Project documentation of the Employer including that provided by the Bidder/Contractor. The Bidder/Contractor will also grant the Monitor, upon his request and demonstration of a valid interest, unrestricted and unconditional access to his project documentation. The same is applicable to Subcontractor(s). The Monitor shall be under contractual obligation to treat the information and documents of the Bidder/Contractor/Subcontractor(s) with confidentiality.

6.7 The Employer will provide to the Monitor sufficient information about all meetings among the parties related to the project provided such meetings could have an impact on the contractual relations between the parties. The parties will offer to the Monitor the option to participate in such meetings as and when required.

6.8 The Monitor will submit a written report to the CMD/CEO/MD of Employer within 30 days from the date of reference or intimation to him by the Employer/Bidder and should the occasion arise, submit proposals for correcting problematic situations.

6.9 The word 'Monitor' would include both singular and plural.

6.10 In the event of a dispute between the management and the contractor related to those contracts were integrity pact is applicable, in case both the parties agree, they may try to settle the dispute through mediation before the panel of IEMs in a time bound manner. In case the dispute remains unresolved even after mediation by the panel of IEMs, SJVN may take further action as per the terms and conditions of Contract. Expenses on dispute resolution shall be equally shared by both the parties.

7.0 <u>Facilitation of Investigation</u>

In case of any allegation of violation of any provisions of this Pact or payment of commission, the Employer or its agencies shall be entitled to examine all the documents including the Books of Accounts of the Bidder/Contractor and the Bidder/Contractor shall provide necessary information and documents in English and shall extend all possible help for the purpose of such examination.

8.0 <u>Law and Place of Jurisdiction</u>

This Pact is subject to Indian Law. The place of performance and jurisdiction is the Registered Office of the Employer. The arbitration clause provided in the tender document/contract shall not be applicable for any issue/dispute arising under Integrity Pact.

9.0 <u>Other Legal Actions</u>

9.1 The actions stipulated in this Integrity Pact are without prejudice to any other legal action that may follow in accordance with the provisions of the extant law in force relating to any civil or criminal proceedings.

9.2 Changes and supplements as well as termination notice need to be made in writing.

9.3 If the Contractor is a partnership or a consortium or a joint venture, this pact must be signed by all partners of the consortium/joint venture. In case of sub-contracting, the principal contractor shall be solely responsible adherence to the provisions of IP by the sub-contractor(s)

10.0 <u>Validity</u>

10.1 The validity of this Integrity Pact shall be from date of its signing and extend upto 5 years or the complete execution of the contract to the satisfaction of both the Employer and the Bidder/Contractor/Seller, including warranty period, whichever is later. In case BIDDER is unsuccessful, this Integrity Pact shall expire after six months from the date of the signing of the contract or six months from the date of opening of price bids, whichever is earlier.

10.2 Should one or several provisions of this Pact turn out to be invalid, the remainder of this Pact shall remain valid. In this case, the parties will strive to come to an agreement to their original intention.

11.0 The Parties hereby sign this Integrity Pact at _____ on _____.

Employer	Bidder
Name of the Officer	(Authorised Person)
Designation	(Name of the Person)
	Designation
Place----------	Place----------
Date----------	Date----------
Witness1._____	Witness1._____
(Name and address)	(Name and address)
2._____	2._____
(Name and address)	(Name and address)

Guidelines on Banning of Business Dealings

Guidelines on Debarment of Business Dealings for SJVN Limited (including its Subsidiaries and Joint Ventures)

1.0 Introduction

SJVN (including its subsidiaries, and joint ventures) deal with various bidders, contractors, suppliers, consultants, and service providers, who are expected to adopt ethics of highest standards and a very high degree of integrity, commitments and sincerity towards the work undertaken. It is not in the interest of SJVN to deal with Agencies who commit deception, fraud or other misconduct in the tendering process. These Guidelines are issued with a view to ensuring transparency, integrity, and fairness in public procurement undertaken by **SJVN Limited,** its Subsidiaries and Joint ventures.

These guidelines are framed in alignment with the 'Guidelines on Debarment of firms from Bidding' issued by the **Department of Expenditure, Ministry of Finance, Government of India.**

2.0 Scope

These Guidelines shall apply to all procurements financed, executed, or managed by SJVN, its Projects, Power Stations, Regional Offices, Liaison Offices including its subsidiaries, and joint ventures, and shall be binding upon all categories of bidders, contractors, suppliers, consultants, and service providers dealing with SJVN or its associated entities.

3.0 Definitions

a) **SJVN** means SJVN Ltd., its Projects, Power Stations, Regional Offices, Liaison Offices including its subsidiaries, and joint ventures.

b) **Debarment** means disqualification of a bidder from participation in any procurement process undertaken by SJVN for a specified period in accordance with Rule 151 of GFR 2017.

For the purposes of these Guidelines, the expressions *banning of firm, suspension,* and *blacklisting* shall convey the same meaning as *debarment.*

c) **Firm:** The term 'Firm' or 'Bidder' has the same meaning for the purpose of these guidelines, which includes an individual or person, a company, a co-operative society, a Hindu undivided family, and any association or body of persons, whether incorporated or not, engaged in trade or business.

d) **Allied Firm** means any concern within the sphere of effective influence of a debarred firm. In determining such influence, the following factors shall be considered—

(i) whether the management is common;

(ii) whether majority interest in the management is held by the partners or directors of the debarred firm;

(iii) whether substantial or majority shares are owned by the debarred firm and, by virtue thereof, it has a controlling voice;

(iv) whether the firm directly or indirectly controls, or is controlled by, or is under common control with another bidder; and

(v) all successor firms shall also be treated as allied firms.

e) Unit shall mean the Project/ Power Station/ Regional Office/ Liaison Office/Subsidiary/JV, as the context requires.

4.0 Authorities and Jurisdiction

(a) SJVN-level Debarment.

Competent Authority: Functional Director, SJVN. In case of subsidiaries, the Competent Authority shall be CEO.

Appellate Authority: Chairman & Managing Director (CMD), SJVN. In case of subsidiaries, the Appellate Authority shall be Chairman of the subsidiary.

(b) Ministry of Power (MoP)-level Debarment.

Debarment orders issued or endorsed by the Ministry of Power shall be governed by the Competent and Appellate Authorities as may be notified by the Ministry from time to time, and shall be binding on SJVN, its subsidiaries, and joint ventures for the period specified therein.

(c) Department of Expenditure (DoE)-level Debarment.

Debarment orders issued or endorsed by the Department of Expenditure, Ministry of Finance, Government of India, shall be governed by the Competent and Appellate Authorities specified by the said Department, and shall be binding on SJVN, its subsidiaries, and joint ventures for the period specified therein

5.0 Initiation of Debarment proceedings

During bidding: Action for banning of business dealings with any Firm shall be initiated by the department responsible for invitation of bids after noticing the irregularities or misconduct on the part of Firm concerned.

During execution: Action for banning of business dealings with any Firm shall be initiated by the respective department responsible for execution of works/services after noticing the irregularities or misconduct on the part of Firm concerned.

Besides the concerned department, Vigilance Department of each Unit/ Corporate Vigilance may also be competent to initiate such action.

6.0 Grounds for Debarment

Without prejudice to Rule 151 and Rule 175 of GFR 2017, a bidder or any of its successors may be debarred from participation in procurement undertaken by SJVN and its subsidiaries and JVs for any of the following reasons—

a) conviction under the *Prevention of Corruption Act, 1988,* the *Indian Penal Code* or Bhartiya Nyaya Sanhita, 2023*,* or any other law in force, for causing loss of life, damage to property, or threat to public

health in the course of execution of a public procurement contract;

b) breach of the *Code of integrity* prescribed under Rule 175 of GFR 2017, including bribery, collusion, bid-rigging, anti-competitive conduct, false declaration, obstruction of investigation or audit, or undisclosed conflict of interest;

c) submission of false or forged information, misrepresentation, or concealment of material facts, resorting to corrupt or fraudulent practices;
d) persistent failure, default, or non-performance of contractual obligations;
e) supply of substandard material, non-supply of material, abandonment of works, sub- standard quality of works, or failure to abide by the Bid Securiñg Declaration etc.;
f) misuse of SJVN's premises or its facilities, forcefully occupies or damages SJVN's properties including land, water resources, forests / trees or tampers with documents/records etc.; and
g) Any other act or omission which, in the opinion of SJVN, warrants debarment in the interest of probity, fairness, and public interest.

7.0 Debarment Review Committee (DRC) and Procedure for Debarment

a) Constitution of DRC:

Prior to the initiation of debarment proceedings, the Competent Authority shall constitute a Debarment Review Committee (DRC) for examination of the case. The Committee shall comprise officers not below the rank of General Manager or Head of Department / Head of Project, as under—

- One officer from Contracts or Procurement of the concerned Unit or the Corporate Office;
- One officer from Finance (Corporate / Projects) of the concerned Unit or Corporate Finance;
- One officer from Corporate Law / Legal; and
- One officer representing the user or indenting department at the Corporate or Unit level, or the Head of Project / Engineer-in-Charge representing the concerned project site, as the case may be.

The officer belonging to the department initiating the proposal for debarment shall act as the Coordinator of the DRC and shall be responsible for convening meetings, facilitating examination of relevant records etc. The DRC shall submit its report to the Competent Authority.

b) Mandate and Process:

The DRC shall,

(i) examine all facts, records, and evidence pertaining to the case;

(ii) ensure that a show-cause notice has been issued and that a reasonable opportunity of representation, including personal hearing if sought, has been afforded;

(iii) assess the applicability to allied and successor firms; and

(iv) submit a reasoned and self-contained recommendation to the Competent

Authority within eight (08) weeks, extendable with recorded justification.

c) Decision:

The DRC shall function in an advisory capacity. The final decision shall rest with the Competent Authority, who shall, after due consideration of the DRC's recommendation, issue a *speaking order* specifying the reason (in brief), scope, jurisdiction, and duration of debarment.

The entire proceeding shall, as far as practicable, be concluded within twelve (12) weeks from the date of initiation.

8.0 Period and Effect of Debarment

a) Maximum period — up to three (3) years for conviction-based cases under Rule 151(i) (DoE-wide), and up to two (2) years for breach of the Code of Integrity or performance-related grounds at the SJVN/MoP level.

b) Minimum period —ordinarily not less than six (6) months.

c) Commencement — the period of debarment shall commence from the date of issue of the debarment order by the issuing entity.

d) Contract Placement Bar — no contract of any kind shall be placed on a debarred firm, including its allied firms; this prohibition shall also apply in cases of risk purchase.

e) Bid/Contract Dates — only bids from firms that are not debarred on (i) the date of submission/opening of the tender and (ii) the date of issuance of Letter of Award/ Signing of Contract Agreement shall be considered.

f) Bids by Debarred Firms — if a debarred firm submits a bid, such bid shall be ignored. If such firm is the lowest (L-1), the next lowest eligible bidder shall be considered as L-1. Any bid security submitted by the debarred firm shall be returned.

g) Existing Contracts —contracts concluded prior to the issue of the debarment order shall not be affected.

h) Removal from approved / empanelled lists — the debarred firm shall also be removed from any approved/empaneled lists.

9.0 Applicability to Allied and Successor Firms

Debarment of a firm shall automatically extend to its allied and successor firms unless otherwise directed by the Competent Authority for reasons recorded in writing.

In the case of debarment of a joint venture or consortium, all partners shall stand debarred for the period specified in the debarment order, and the names of all such partners shall be explicitly mentioned in the order.

10.0 Jurisdiction and Recommendation of Debarment

a) **SJVN-Level Debarment:** for misconduct confined to SJVN or its subsidiaries/joint ventures, including non-performance, false declarations, or breach of integrity obligations.

b) **Recommendation to Ministry of Power (MoP):** for cases having sector-wide or systemic implications affecting multiple PSUs under the administrative control of MoP, or integrity breaches such as corruption, bribery, or cartelization in tenders of SJVN.

c) **Recommendation to Department of Expenditure (DoE):** for conviction-based cases or offences causing loss of life, property, or threat to public health, warranting Government-wide debarment under Rule 151.

Where such Government-wide debarment is warranted, the department responsible for initiation of debarment proceedings shall forward a self-contained proposal, along with complete supporting documentation, to the Ministry of Power for onward transmission to the Department of Expenditure, in accordance with the DoE OM.

11.0 Effect of Debarment by Other Authorities

SJVN shall give effect to debarment orders issued by the **Department of Expenditure (Ministry of Finance),** the **Ministry of Power,** or any other Government entity, where such orders expressly provide for applicability across Ministries, Departments, or PSUs.

Note (GeM). The Government e-Marketplace (GeM) may debar bidders for a period of up to two (2) years on its portal. SJVN shall honor such debarments for procurements undertaken on or through GeM, in accordance with GeM provisions.

12.0 Publication of Debarment Orders

Debarment orders issued by SJVN shall be displayed on SJVN's website and shall be binding upon all subsidiaries and joint ventures of SJVN. For the purpose, the concerned department shall forward the name and details of the Agency (ies) banned to IT&C Division of SJVN's Corporate Office for displaying the same on SJVN website. The details shall also be displayed on the respective subsidiary's website.

Debarment orders of the Ministry of Power shall be displayed on the Ministry's website, and those of the Department of Expenditure shall be displayed on the *Central Public Procurement Portal (CPPP)* maintained by DoE.

13.0 Appeal and Review (SJVN Level)

An aggrieved firm may prefer an appeal to the CMD, SJVN, within thirty (30) days from the date of communication of the SJVN-level debarment order.

The CMD may, after due consideration of the record and representation, uphold, modify, or set aside the order.

Appeal against MoP/DoE orders shall be dealt as per Guidelines on Debarment of firms from Bidding' issued by the **Department of Expenditure, Ministry of Finance, Government of India.**

14.0 Revocation and Reinstatement

(a) A debarment order shall stand automatically revoked upon expiry of the period specified therein; no separate order shall be required.

(b) For debarments issued by SJVN, the CMD, SJVN shall be the sole authority competent to review or revoke the order prior to its expiry, either *suo motu* or upon representation by the firm, based on new facts or sufficient justification.

Such revocation shall be issued by formal order and shall take effect from the date specified therein.

(c) For debarments issued by the Ministry of Power or the Department of Expenditure, revocation or modification prior to expiry shall rest exclusively with the respective issuing authority.

(d) Upon receipt of a revocation or modification order, the concerned department shall promptly update internal records and, where applicable, SJVN's website or the CPPP.

Note: In case of shortage of suppliers/contractors/service providers in a particular group, such debarments may also hurt the interest of procuring entities. In such cases, endeavour should be to pragmatically analyse the circumstances, try to reform the supplier and may get a written commitment from the suppliers / contractors / service providers that its performance will improve.

15.0 Record-Keeping and Reporting

All proceedings, communications, and decisions under these Guidelines shall be duly forwarded for record to Corporate Civil Contracts Deptt.

A consolidated list of firms debarred and reinstated at the SJVN level shall be maintained by Corporate Contracts Deptt. and published on SJVN's website.

Matters having inter-ministerial or sectoral implications, including those requiring consideration by the Department of Expenditure, Ministry of Finance, shall be reported to the **Ministry of Power** through the **Corporate Civil Contracts Department,** in accordance with the procedure prescribed under the DoE OM.

Form of Declaration of Eligibility

Undertaking

I/We, ……**[Name of the Bidder / Firm / Company],** having our registered office at **[……..],** do hereby certify that neither I/we nor any of our allied firms, successor entities, consortium / joint-venture partners (as applicable) are currently under debarment by SJVN Limited (including its subsidiaries/JVs), the Ministry of Power, Government of India, or the Department of Expenditure (DoE), Ministry of Finance, Government of India.

I/We fully understand that if this declaration/undertaking is found to be false or misleading, our Bid shall be liable for rejection and, if the Contract has been awarded, the same shall be liable for termination, in addition to any other action as may be taken under law.

Date. ……

Place……

(Name & Signature of Authorised Representative
With Seal/Stamp of Company)

Notes:

- In case of subsidiaries registered outside India, the reference of relevant Government Department dealing with Banning may also be incorporated.
- The undertaking shall be obtained at the time of submission of bids as well as before placement of LOA/Signing of Contract Agreement.
- The undertaking shall be submitted by Bidder including each of the JV/Consortium partners and any sub-contractors proposed.

SECTION -IV
GENERAL CONDITIONS OF CONTRACT

GENERAL CONDITIONS OF CONTRACT

CLAUSE-1: DEFINITIONS:

In the contract, the following expression shall, unless the context otherwise requires, have the meanings thereby respectively assigned to them:

(i) **Bill of Quantities or Schedule of Quantities & Prices:** means the priced and completed bill of quantities forming part of the Contract.

(ii) **Contract:** means the document forming the tender, acceptance thereof and the formal agreement executed between the SJVN Limited and the Contractor, together with documents referred to therein.

(iii) **Contract Price:** means the amount arrived at by applying percentage (%) quoted by bidder (pursuant to e-RA or otherwise, as applicable) to the rates shown in Bill of Quantities as allowed and included in the Letter of Acceptance.

(iv) **Contractor:** means the successful Bidder who is awarded contract to perform the work covered under these tender documents and shall be deemed to include the Contractor's successors, executors, representatives or assigns.

(v) **Corporation or Employer:** means the SJVN Limited having its registered office at SJVN Corporate CHQ, Shanan, Shimla, Pin-171006 (Himachal Pradesh), and includes therein legal representatives, successors and assigns.

(vi) **Construction Drawing**: means such drawings approved in writing by the Engineer-in-Charge/ Employer and issued for actual construction of the Works from time to time by the Engineer-in-Charge.

(vii) **Contractor's Equipment:** means all appliances and things of whatsoever nature (other than Temporary Works) required for the execution and completion of the Works and the remedying of any defects therein, but does not include Plant, materials or other things intended to form or forming part of the Permanent Works.

(viii) **Cost:** The word "cost" shall be deemed to include overhead costs whether on or off the site.

(ix) **Day:** means a calendar day beginning and ending at midnight.

(x) **Drawing:** means and shall include Tender drawing and Construction Drawing.

(xi) **Engineer-in-Charge/Engineer:** means the Engineering Officer nominated by the Employer or its duly authorized representative to direct, supervise and be in charge of the works for the purpose of this contract.

(xii) **HOP:** means Head of Project, the person deputed by the Employer, as the case may be.

(xiii) **Letter of Award or Acceptance:** means a letter from the Employer/Engineer-in-Charge conveying the acceptance of the

tender/offer subject to such reservations as may have been stated therein.

(xiv) **Permanent works:** means the permanent works to be executed (including Plant) in accordance with the Contract.

(xv) **Plant:** means machinery, apparatus and like intended to form or forming part of Works.

(xvi) **Site:** means the land and/or other places, on or through which the works are to be executed including any other lands or places which may be allotted for the purpose of the contract.

(xvii) **Specifications:** means the Technical specification of the Works included in the Contract and any modification thereof or addition thereto made under Clause 18 or submitted by the Contractor and approved by the Engineer.

(xviii) **Time for Completion :** means the time for completing the execution of and passing the Tests on Completion of the Works or any Section or part thereof as stated in the Contract (or as extended under Clause 39) calculated from the Commencement Date.

(xix) **Temporary works:** means all temporary works of every kind (other than Contractor's Equipment) required in or about the execution and completion of the Works and the remedying of any defects therein.

(xx) **Tender Drawings:** means the drawings referred to in the Specifications and/or appended with the tender document.

(xxi) **Urgent Works:** means any urgent measures, which in the opinion of the Engineer-in-Charge, become necessary at the time of execution and/or during the progress of work to obviate any risk of accident or failure or to obviate any risk of damage to the structure, or required to accelerate the progress of work or which become necessary for security or for any other reason the Engineer-in-Charge may deem expedient.

(xxii) **Week:** means seven consecutive calendar days.

(xxiii) **Work or Works:** means Permanent Works and/or Temporary Works to be executed in accordance with the Contract.

CLAUSE 2: INTERPRETATIONS

2.1. Words importing the singular only shall also include the plural; he includes she and vice versa unless this is repugnant to the context. Unless specifically defined, words shall have normal meaning under the language of Contract.

2.2. Heading and marginal notes in these General Conditions shall not be deemed to form part thereof or be taken into consideration in the interpretation or construction thereof of the Contract.

2.3. Any error in description, quantity or price in Bill of Quantities or any omission there from shall not vitiate the Contract or release the Contractor from execution of the whole or any part of the Works comprised therein according to drawings and

Specifications or from any of his obligations under the Contract.

2.4. The documents forming the Contract are to be taken as mutually explanatory of one another. The sequence of the priority of the documents for the purposes of interpretation shall be as under:

a) Agreement;
b) Letter of acceptance;
c) Tender Form, Form of Declaration;
d) Schedules;
e) Special Terms and Conditions;
f) General Conditions of Contract;
g) Technical Specifications and Safety Code;
h) Tender Drawings;
i) Bill of Quantities;
j) Instructions to Bidders
k) Any other document forming part of the Contract

CLAUSE 3: SECURITY DEPOSIT

3.1. The Security Deposit shall comprise the following:

i. Performance Security Deposit to be furnished by the Contractor within 28 days from the date of issuance of Letter of Acceptance.

ii. Retention Money to be recovered from Interim bills of the Contractor.

3.2. The Contractor within 28 (Twenty Eight) days from the date of issuance of Letter of Acceptance, shall furnish a **Performance security deposit of 3% (Three percent)** of the Contract Price. The Performance Security Deposit shall be in the form of irrevocable, valid and fully enforceable Bank Guarantee in favour of SJVN Ltd. in the form prescribed from a Nationalized / Scheduled Bank of India acceptable to SJVN or in the form of a FDR pledged to SJVN Ltd. issued by a Nationalized/ Scheduled Indian Bank located in India acceptable to SJVN and shall valid **till 45 (Forty five) days beyond Defect Liability Period.**

3.3 The interest *shall be charged on delay period for breach in timely submission of CPG/Initial security deposit without prejudice to right of SJVN to other remedies available under the contract. The GST shall be levied and recovered extra on interest as per applicable rule of GST.

** Interest shall be chargeable on per the day basis on the amount of CPG/PSD @ SBI MCLR as on date of bid submission specified in the tender document +200 basis point*

Note: a) In case last day of submission of performance security happens to be a bank holiday, the last day of submission shall be the next working day.

b) In case extension of contract , if required the contract performance security needs to be extended as per the extension accorded.

3.4. **Retention money shall be deducted by the Engineer-in-Charge from the interim bills of the Contractor @ 3% (three percent)** of the total value of each bill of the work done (including those of price variation) towards security deposit.

3.5 The Notification of Award/ Letter of Acceptance will constitute the formation of the Contract until formal agreement is signed and further subject only to the furnishing of a performance security deposit in accordance with the relevant provisions of Tender/ bid Document.

3.6 If the Contractor expressly requests in writing, he will be permitted to convert the amount of Retention Money deducted from his interim bills into Bank Guarantee to be submitted in the prescribed Form, when cumulative retention money reaches more than 50% of the maximum limit i.e. 50% of 3% of Contract Price, subject to minimum amount of ***Rs 1.0 (one) Crore*** or more in each event if applicable. The Contractor shall ensure and demonstrate that all such amounts shall be used strictly for completion of same work.

3.7 All compensation or other sums of money payable by the Contractor to the Employer under the terms of this Contract or any other contract or on any other account whatsoever may be deducted from Security Deposit. Also in the event of the Contractor's Security Deposit being reduced by reasons of such deductions, as aforesaid, the Contractor shall, within 14 days of receipt of notice of demand from the Engineer-in-Charge, make good the deficit in Security Deposit.

3.8 Should there arise any occasion under the Contract due to which the periods of validities of Bank Guarantees as may have been furnished by the Contractor from time to time, are required to be extended/renewed, the Contractor shall get the validity periods of such guarantees extended/renewed, and furnish these to the Engineer-in- Charge one month before the expiry date of the aforesaid Guarantees originally furnished failing which the existing Bank Guarantees shall be invoked by the Engineer-in-charge. Also in case of any deficit in securities on any account as might occur or is noticed, the Contractor shall forthwith recoup/replace the same with acceptable Security Deposit.

3.9 Bank Guarantees as aforesaid shall be valid till the 45 (Forty five) days beyond Defect Liability Period under the Contract (Clause 43).

3.10 The original BG against Performance Security Deposit and Retention Money should be sent by the Bank to SJVN Limited directly under Regd. Post (A.D.). However, in exceptional cases, where the original BG against Performance Security Deposit and Retention Money is handed over to the bidder by the issuing bank/branch, the bidder shall ensure that an un-stamped duplicate copy of the BG against Performance Security Deposit and Retention Money has been sent immediately by the issuing bank/branch under Regd. Post (A.D.) directly to SJVN Ltd with a

covering letter to compare with original BGs and confirm that it is in order.

CLAUSE 4: REFUND OF SECURITY DEPOSIT

The Security Deposit less any amount due shall, on demand, **be returned to the Contractor on or before 14th day after issuance of Defects Liability Certificate** (referred in Clause 43 and 57 hereof) No interest on the amount of Security Deposit shall be paid to the Contractor at the time of release of Security Deposit as stated above.

CLAUSE 5: SUFFICIENCY OF TENDER

5.1 The Contractor shall be deemed to have satisfied himself as to the correctness and sufficiency of the Tender and of the rates and prices stated in the Bill of Quantities, all of which shall, except insofar as it is otherwise provided in the Contract, cover all his obligations under the Contract and all matters and things necessary for the proper execution and completion of the Works and the remedying of any defects therein.

CLAUSE 6: CONTRACT DOCUMENTS

6.1 The Contract shall be signed in two originals, one for each party to the Contract. The language of the contract shall be English.

6.2 The Contractor shall furnish free of charge true copies of the Contract to the Employer as indicated in Schedule B

6.3 One copy of Contract shall be kept by the Contractor on the Site in good order and the same shall at all reasonable time be available for inspection and use by the Engineer-in-Charge, his representatives or by other Inspecting Officers.

6.4 None of these Documents shall be used by the Contractor for any purpose other than that of this contract.

CLAUSE 7: LIFE-SAVING APPLIANCES AND FIRST-AID EQUIPMENT

The Contractor shall provide and maintain upon the works sufficient, proper and efficient life-saving appliances and first-aid equipment in accordance with the requirement of ILO Convention No.62. The appliances and equipment shall be available for use at all time.

CLAUSE 8: DUTIES AND POWERS OF ENGINEER-IN-CHARGE'S REPRESENTATIVE

8.1 The duties of the representative of the Engineer-in-Charge are to watch and supervise the works and to test and examine any materials to be used or workmanship employed in connection with the works.

8.2 The Engineer-in-Charge may, from time to time in writing, delegate to his representative any of the powers and authorities, vested in the Engineer-in-Charge and shall furnish to the

Contractor a copy of all such written delegation of powers and authorities. Any written instruction or written approval given by the representative of the Engineer-in-Charge to the Contractor within the terms of such delegation shall bind the Contractor and the Employer as though it has been given by the Engineer-in-Charge.

8.3 Failure of the representative of the Engineer-in-Charge to disapprove any work or materials shall be without prejudice to the power of the Engineer-in-Charge thereafter to disapprove such work or materials and to order the pulling down, removal or breaking up thereof. The Contractor shall, at his own expense, again carry out such works as directed by the Engineer-in-Charge.

8.4 If the Contractor is dissatisfied with any decision of the representative of the Engineer-in-Charge, he will be entitled to refer the matter to the Engineer-in-Charge who shall thereupon confirm, reverse or vary such decision and the decision of the Engineer-in-Charge in this regard shall be final and binding on the Contractor.

CLAUSE 9: ASSIGNMENT AND SUBLETTING

The Contractor shall not sub-let, transfer or assign the whole or any part of the work under the Contract. However, the employment of piece-rate workers and purchase of material shall not be construed as sub-letting.

CLAUSE 10: FACILITIES TO OTHER CONTRACTORS

10.1 The Contractor shall, in accordance with the requirements of the work as decided by the Engineer-in-Charge, afford all reasonable facilities to other Contractors engaged contemporaneously on separate contracts and for departmental labour and labour of any other properly authorized authority or statutory body which may be employed at the site for execution of any work not included in the Contract or of any contract which the Employer may enter into in connection with or ancillary to the works. In all matters of conflict of interest, the Engineer-in-Charge shall direct what compromise should be made and his decision shall be final and binding on the parties.

10.2 If, however, pursuant to Sub-Clause 10.1 the Contractor shall, on the written request of the Engineer-in-Charge:

(a) make available to any such other Contractor, or to the Employer or any such authority, any roads or ways the maintenance of which is the responsibility of the Contractor ,

(b) permit the use, by any such, of Temporary facilities or Contractor's Equipment on the Site, or

(c) provide any other service of whatsoever nature for any such, the Engineer-in-Charge shall determine the payment admissible to the Contractor at the cost of other Contractors or Employer as the case may be.

CLAUSE 11: CHANGES IN CONSTITUTION

Where the Contractor is a partnership firm, prior approval in writing of the Engineer-in-Charge shall be obtained before any change is made in the constitution of the firm. Where the Contractor is an individual or a Hindu undivided family business concern, such approval, as aforesaid, shall likewise be obtained before the Contractor enters into any partnership firm which would have the right to carry out the work undertaken by the Contractor. If prior approval as aforesaid is not obtained, the Contract shall be deemed to have been assigned in contravention of Clause 38 hereof and the same action will be taken and the same consequences shall ensure as provided for in the said Clause 38.

CLAUSE 12: POSSESSION AND USE OF SITE

12. 1 Save in so far as the Contract may prescribe:

(a) the extent of portions of the Site of which the Contractor is to be given possession from time to time,

(b) the order in which such portions shall be made available to the Contractor, and, subject to any requirement in the Contract as to the order in which the Works shall be executed, the Employer will give to the Contractor possession of

(c) so much of the Site, and

(d) such access as, in accordance with the Contract, is to be provided by the Employer as may be required to enable the Contractor to commence and proceed with the execution of the Works in accordance with the program referred to in Clause 14, if any, and otherwise in accordance with such reasonable proposals as the Contractor shall, by notice to the Engineer. The Employer will, from time to time as the Works proceed, give to the Contractor possession of such further portions of' the Site as may be required to enable the Contractor to proceed with the execution of the Works in accordance with such program or proposals, as the case may be.

12.2 If the Contractor suffers delay from failure on the part of the Employer to give possession in accordance with the terms of

Sub-Clause 12. 1, the Engineer-in-Charge shall, determine any extension of time to which the Contractor is entitled under Clause 39.

12.3 The Contractor shall be responsible to arrange the land for Contractor's infrastructure works namely field office(s), colony, workshop(s), stores, magazines for explosives including explosive/detonator in isolated locations, assembly-yard, and access thereto over routes as may be required for execution of the Works at his own cost and Employer shall not be responsible for making available the same.

12.4 The Contractor shall provide at his own cost all temporary pathways/roads required at site or to quarries or borrow areas and shall alter, adopt and maintain the same as required from time to time and shall bear all expenses and charges for special or temporary way leaves required by him in connection with access to the site and shall take up and clear them away and make good all damages done to the site as and when no longer required and as and when ordered by the Engineer-in-Charge.

CLAUSE 13: ADVANCES AND RECOVERY THEREOF (Not Applicable)

13.1 Financial assistance in the shape of recoverable advance on written request from the Contractor, may be provided to the Contractor for augmenting/supplementing his resources in the manner indicated hereunder.

13.1.1 Advances for Initial Mobilisation, Preliminary, Enabling and Ancillary Works

Interest bearing Advance upto a maximum of 5 (Five) percent (as mentioned in Schedule B) of the Contract Price may be given to the Contractor for his initial mobilisation, preliminary, enabling and ancillary works, such as labour mobilisation, construction of offices, labour huts, staff quarters, stores, workshops, laying of air, water and electric lines, subject to the following conditions:

(i) The advance shall bear simple interest @ _____percent per annum (as mentioned in Schedule `B'). The monthly interest shall be calculated on outstanding balance of advance on the last day of the previous calendar month.

(ii) Initially a lump sum advance upto **2 (Two)** percent (refer Schedule B) of the Contract Price, shall be paid within one month of the signing of the agreement and on Contractor's **furnishing the requisite Bank Guarantee of the value of 110% of such advances** on the approved form incorporated in the contract from a Nationalised Bank or a Scheduled Bank in India.

(iii) The balance advance shall be released upon mobilization of resources at site to the satisfaction of the Engineer-in- charge and on furnishing the Bank Guarantee from a Nationalised or scheduled bank.

(iv) **The Bank Guarantee so furnished shall be valid till the said advance alongwith interest thereupon has been fully recovered**. Should there arise any occasion under the Contract due to which the period of validities of such Bank Guarantees, are required to be extended or the same be renewed, the Contractor at his own cost shall get the validity period of such guarantees extended or the same be renewed, as the case may be, and furnish the same to the Engineer-in-Charge 30 days before the expiry date of the aforesaid guarantees failing which the Engineer-in-Charge shall be at liberty, to invoke the existing Bank Guarantee or to withhold the payments of the Interim bills till such time the amount of outstanding advance including interest thereupon is fully recovered.

(v) The recovery of advance shall start after the Contractor has received a gross payment equivalent to 10% of Contract Price and shall be effected on pro-rata basis to the gross value of work billed in such a way that the full advance with interest thereupon is recovered by the time 90% of the Contracted Price is paid.

The interest shall be calculated on the outstanding amount of principal at the close of each month. The recovery of interest shall be started when the Contractor has received a gross payment equivalent to 5% of the Contract Price and interest as accrued/accruing till the time 10% of Contract Price is paid shall be recovered in suitable instalments in such a way that the above said accrued interest is fully recovered by the time the Contractor receives a gross payment equivalent to 10% of the Contract Price and thereafter the interest as may be due on 1st of each month will be recovered from the Interim bills of the Contractor to be paid during that month. Recoveries will first be credited to interest due and residual applied to the principal.

13.1.2. Advance for construction equipment:

Interest bearing advance upto a maximum of .....percent (refer schedule B) of the Contract Price will be paid to the Contractor for Construction Equipment subject to the following conditions:

i) The advance shall bear simple interest @ ..... Percent per annum (as mentioned in Schedule `B') The monthly interest shall be calculated on outstanding balance of advance on the last day of the previous calendar month.

ii) The construction equipment, as are required for the actual execution of the work depending upon the techniques and sequences of construction as proposed by the Contractor, shall be mutually discussed and finally approved by the Engineer-in-Charge. Such approved Construction Equipment must reach the site of work before release of advance payment.

iii) The Construction Equipment for which the advance is to be granted shall be of unencumbered ownership of the Contractor and shall be hypothecated in favour of the Employer before the advance is paid. This shall be executed on the form of Hypothecation Deed as approved by the Employer, on legally valid stamp paper of appropriate value. The Hypothecation Deed shall be registered by the Contractor with the Registrar of Companies under the Companies Act and all charges on account of execution of deed, registration charges etc. shall be borne by the Contractor and the Contractor shall duly inform the Engineer-in-Charge about such registration. The Contractor shall also get such construction Equipment insured under CPM Policy in the joint name of the Contractor and the Employer for full value against all risks at his cost. The insurance policy shall be valid till such time the Plant and Equipment remains under Hypothecation and the advance is recovered/repaid in full. Both the Hypothecation Deed and the Insurance Policy shall be deposited by the Contractor with the Engineer-in-Charge before the advance is released.

iv) Subject to the maximum limit fixed for such advances as above and conditions thereto, the advance shall be granted to the extent of 90% of the cost of new equipment purchased by him duly hypothecated and supported by due proof of payment, purchase vouchers and other connected documents. No advance shall be granted for old, used equipment.

v) In case the Contractor desires to shift any such equipment from the site of work, he shall do so with the written permission of the Engineer-in-Charge and after repaying the outstanding advance of that particular equipment.

vi) The recovery of principal shall start after the Contractor has received a gross payment equivalent to 10% of Contract Price and shall be effected on pro-rata basis to the gross value of work billed in such a way that the full advance is recovered by the time 90% of the Contract Price is paid. The interest shall be calculated on the outstanding amount of principal at the close of each month.

The recovery of interest shall be started when the Contractor has received a gross payment equivalent to 5% of the Contract Price and the interest as accrued/accruing till the time 10% of

the Contract Price is paid shall be recovered in suitable instalments in such a way that the above said accrued interest is fully recovered by the time the Contractor receives a gross payment equivalent to 10% of Contract Price and thereafter the interest as may be due on 1st of each month will be recovered from the Interim bills of the Contractor to be paid during that month. Recoveries will first be credited to interest due and residual applied to the principal.

vii) The cost of the new equipment for the purpose of this clause shall mean the cost as invoiced by the suppliers of the Construction equipment, inclusive of taxes and duties.

In respect of imported equipment, C.I.F. cost plus customs duty shall be deemed to be the cost of equipment for the purpose of this clause. For this purpose, C.I.F. cost shall be the same as determined by the customs authorities for customs duty purposes.

13.2 The gross value of work billed/gross payment shall mean to include payment towards scheduled items, extra items, deviated items, substituted items, altered items and escalation bills for the purpose of this clause only.

13.3 The interest as specified in 13.1.1 and 13.1.2 shall be charged on monthly basis reckoned from the date of release thereof.

13.4 The contractor shall be entitled to replace the advance payment Bank Guarantee with the Bank Guarantee of the value equal to 110% of the reduced outstanding amount of down payment as a result of part recovery from time to time or alternatively, the Contractor may furnish an undertaking from issuing Bank, as acceptable to the Employer, to the effect that the Bank's liability under the Bank Guarantee is hereby reduced to an amount equal to 110% of the reduced outstanding amount of down payment as a result of part recovery from time to time. Advance payment Bank Guarantee shall be returned to the Contractor within 30 days after its reduction to zero or fully recovered.

13.5 If the advance payment has not been repaid by the Contractor prior to the issue of the certificate of completion (Clause 42) for the works or prior to termination under Clause 36, Clause 37, Clause 38 Or Clause 32 (Force Majeure) (as the case may be), the whole of the balance then outstanding shall immediately become due and payable by the Contractor to the Employer.

13.6 The release of advance payment shall be subject to receipt of original Bank Guarantee directly from the issuing bank in the manner & term as stipulated in these Conditions of Contract to the Employer and which is in finality to be acceptable to the Engineer-in-Charge.

CLAUSE 14: COMMENCEMENT OF WORK

14.1 The Contractor shall commence the Work(s) immediately after the issue of Letter of Acceptance and shall proceed with the same with the expedition and without delay as may be expressly sanctioned or ordered by the Engineer-in-Charge. If the Contractor commits default in the commencement of work within 30 days of issue of Letter of Acceptance, the Engineer-in-Charge shall without prejudice to any other right or remedy be at liberty to cancel the Contract and earnest money shall be forfeited.

14.2 The Contractor shall submit along with his tender, the construction planning, phasing & sequence of construction, time & progress chart within the framework of construction schedule, i.e. Schedule 'C' for achieving the completion targets of Work(s) as a whole and also of each group/sub- group of work(s) as stipulated in Bill of Quantities, showing the order or procedure and a statement showing the method and techniques of construction by which the Contractor proposes to carryout the Works. Such charts or program shall be prepared in direct relation to the construction schedule i.e. Schedule 'C' as well as the time stated in the Contract for completion of part of Works stipulated in Schedule 'A'. It shall indicate the commencement and completion of various trades or sections of the Works, distribution and balancing of work-load pertaining to construction activities in various structures/component parts of Works into working seasons duly taking into account working months available in each working season and number of working days available in the working months, to arrive at seasonal monthly average and seasonal monthly peak progress with corresponding time periods. Such construction planning will be discussed and finally agreed with successful Bidder before award of work and the same shall form an integral part of the agreement. Contractor shall follow such an agreed planning & scheduling. However, it shall not relieve the Contractor of any of his duties, obligations or responsibilities under the Contract.

14.3 The Contractor shall provide a detailed month-wise cash flow estimate at the beginning of each financial year duly revised at quarterly intervals if required so by the Engineer-in-Charge.

14.4 The submission to and consent by the Engineer-in-Charge of such programs or the provision of such general descriptions or cash flow estimates shall not relieve the Contractor of any of his duties or responsibilities under the Contract.

CLAUSE 15: WORKS TO BE CARRIED OUT IN ACCORDANCE WITH SPECIFICATIONS, DRAWINGS AND ORDERS, ETC

15.1 The Contractor shall execute the Works in the most substantial

and workmanlike manner and both as regards material and otherwise in every respect in strict conformity with the Specification. The Contractor shall also conform exactly, fully and faithfully to the designs, drawings, Specifications and instructions in writing in respect of the work, duly signed by the Engineer-in-Charge issued from time to time. The Contractor shall take full responsibility for the adequacy of all the site operations and methods of construction.

The Contractor shall give prompt notice to the Engineer-in-Charge, with a copy to the Employer, of any error, omission, fault or other defect in the design of or Specifications for the Works which he discovers when reviewing the Contract or executing the Works.

15.2 The Contractor shall be entitled to receive, the documents set forth herein during the performance of the Contract:

a.	Construction drawings and revisions thereto	3 sets
b.	Specifications or revisions thereof other than standard printed Specifications.	2 sets
c.	Explanations, instructions etc.	1 copy

Such further drawings, explanations, modifications and instructions, as the Engineer-in-Charge may issue to the Contractor from time to time in respect of the Work, shall be deemed to form integral part of the Contract and the Contractor shall to carry out the Work accordingly.

15.3 The Contractor shall give notice to the Engineer-in-Charge, whenever planning or execution of the Works is likely to be delayed or disrupted unless any further drawing or instruction is issued by the Engineer-in-Charge within a reasonable time. The notice shall include details of the drawing or instruction required and of why and by when it is required and of any delay or disruption likely to be suffered if it is late.

15.4 If, by reason of any failure or inability of the Engineer-in-Charge to issue, within a time reasonable in all the circumstances, any drawing or instruction for which notice has been given by the Contractor in accordance with Sub-Clause 15.3, the Contractor suffers delay then the Engineer-in-Charge shall, after approval of the Employer determine any extension of time to which the Contractor is entitled under Clause 39.

CLAUSE 16: SETTING OUT THE WORKS

16.1 The Engineer-in-Charge shall establish/indicate the Bench Marks and convey the same in writing to Contractor

immediately after issuance of Letter of Acceptance. Engineer-in-Charge shall be responsible for correctness of such data / bench marks conveyed to the Contractor.

16.2 The Contractor shall be responsible for the true and proper setting out of all the work (in relation to the afore-mentioned Bench Marks) for the correctness of the location, grades, dimensions and alignment of all components of the work; and for the provisions of all instruments, appliances, materials and labour required in connection therewith. If at any time during the progress of work, any error shall appear or arise in the location, grades, dimensions, or alignment of any part of the Work, the Contractor on being required to do so by the Engineer-in-Charge shall, subject to Clause 16.1 hereof, at his own expense, rectify such error to the satisfaction of the Engineer-in-Charge.

16.3 The Contractor shall afford all reasonable facilities and assistance to the Engineer-in-Charge for checking the setting out and lines and grades established by the Contractor. The checking of any setting out or of any line and grade by the Engineer-in-Charge shall not in any way relieve the Contractor of his responsibility for the correctness thereof.

CLAUSE 17: URGENT WORKS

If any urgent work (in respect whereof the decision of the Engineer-in-Charge shall be final and binding) becomes necessary, the Contractor shall execute the same as may be directed.

CLAUSE 18: DEVIATIONS

18.1 The Engineer-in-Charge shall have powers to make any deviations in the original specifications or drawings or designs of the works or any part thereof that are, in his opinion, necessary at the time of or during the course of execution of the Works. For the aforesaid purpose or for any other reason, if it shall, in the opinion of the Engineer-in-Charge, be desirable, he shall also have the powers to make Deviations, such as (i) Variations (ii) Extra (iii) Additions/Omissions and (iv) Alterations or Substitutions of any kind. No such Deviations in the specifications or drawings or designs or Bill of Quantities, as aforesaid, shall in any way vitiate or invalidate the Contract and any such Deviations which the Contractor may be directed to do shall form integral part of the Contract as if originally provided therein and the Contractor shall carry out the same on the same terms & conditions in all respects on which he agreed to do the works under the contract subject to clause 18.2 of the bid.

18.2 The rates for such items of work as are required to be executed due to Deviations, as stated in sub-clause 18.1 above shall be payable in the manner as stated hereunder:

i) **The rates already provided in the Bill of Quantities**, shall apply in respect of the same item(s) of work to be executed due to Variation, subject to the condition that the Variation so ordered do not exceed (+) 30% (plus thirty percent) in respect of quantities of individual items appearing in the Bill of Quantities. **However, the quoted rates shall hold good for all minus Variations.**

ii) In case of items for which rates are not available in the Bill of Quantities, the rates of such items as far as practicable, **shall be derived from the quoted rates of analogous item(s)** in the Bill of Quantities.

iii) In the cases, where analogous items are not available in the Bill of Quantities, such items shall be termed as extra items and the rates for such items and also for items exceeding the prescribed limit of (+) 30% as mentioned in clause 18.2 (i) above, the Contractor, within 15 days (or as agreed by the Engineer) of receipt of order to execute such items shall submit rate analysis to the Engineer-in-Charge supported by documentary evidence of basic rates adopted therein, notwithstanding the fact that the rates for such items exist in the Contract, having regard to the cost of materials (including transportation and taxes, levies if paid), actual wages for labour and ownership & operational cost of construction equipment as per standard norms or if standard norms are not specified/available then on the basis of labour/materials/equipment actually engaged for the particular work. The standard norms for materials and labour specified herein shall mean those specified in "Guidelines for preparation of Project Estimates for River Valley Projects (Latest Version) of Central Water Commission, Govt. of India and if not available therein, then of Delhi Schedule of Rates/State's Public Works Department. Standard norms for machinery use shall mean those of "Bureau of Indian Standards (IS 11590:1995- Latest Version)" and if not available therein, then those specified in "Guidelines for preparation of Project Estimates for River Valley Projects (Latest Version) of Central Water Commission, Govt. of India".

Over and above the cost of labour, material arranged by the Contractor and ownership & operational cost of plant and machinery, an element of such percentage as specified in Schedule 'B shall be allowed to cover the Contractor's overheads, profits, and supervision charges.

Provided further that unless otherwise specifically mentioned in BOQ or Letter of Acceptance, no change in the rate or price for

any item contained in the Contract shall be considered unless change in quantity multiplied by BOQ rate do not exceed 0.25 % of the Contract Price and the actual quantity of work executed under the item exceeds the quantity set out in the Bill of Quantities by more than 30 percent.

The Engineer-in-Charge shall examine the rate analysis submitted by the Contractor and fix the rates accordingly whose decision shall be conclusive, final and binding on the Contractor.

18.3 If requested by the Contractor, the Time for Completion of the Works shall, in the event of any deviation resulting in additional cost over the Contract Price, be extended in the proportion which the altered, additional or substituted work bears to the original Contract Price plus such further additional time as may be considered reasonable by the Engineer-in-Charge.

18.4 Under no circumstances, the Contractor shall suspend the work on account of non-settlement of rates of such Deviated items.

18.5 Provided that no deviations instructed to be done by the Engineer – in – charge pursuant to Clause 18.1 shall be valid under Clause 18.2 unless within 15 days of the date of such instruction before the commencement of execution of deviated items, notice shall have been given either ;

a) By the Contractor to the Engineer – in – Charge of an intention to Claim extra payment or varied rate or price or

b) By Engineer – in – Charge to the Contractor of his intention to vary a rate or price for the deviated items.

CLAUSE 19: CONTRACTOR'S SUPERVISION

19.1 The Contractor shall appoint at his own expense adequate number of engineers with sufficient experience to supervise the Works.
The Contractor or his authorized representatives present at the site(s) shall superintend the execution of the works with such additional assistance in each trade, as the work involved shall require and considered reasonable by the Engineer-in-Charge. Directions/instructions given by the Engineer-in-Charge to the Contractor's authorized representatives shall be considered to have the same force as if these had been given to the Contractor himself.

CLAUSE 20: INSTRUCTIONS AND NOTICES

20.1 Except as otherwise provided in this Contract, all notices to be given on behalf of the Employer and all other actions to be

taken on its behalf may be given or taken by the Engineer-in-Charge or any officer for the time being entrusted with the functions, duties and powers of the Engineer-in-Charge.

20.2 All instructions, notices and communications etc. under the contract shall be given in writing and any such oral orders/instructions given shall be confirmed in writing and no such communication which is not given or confirmed in writing shall be valid.

20.3 Either party may change a nominated address to another address by prior notice to the other party.

20.4 The Engineer-in-Charge shall communicate or confirm the instructions to the Contractor in respect of the execution of work in a `Work Site Order Book' maintained in the office of the Engineer-in-Charge or his representative and the Contractor or his authorized representative shall confirm receipt of such instructions by signing the relevant entries in this book. If required by the Contractor, he shall be furnished a certified true copy of such instruction(s).

CLAUSE 21: CONSTRUCTION EQUIPMENT

21.1 The Contractor shall provide and install all necessary construction equipment and machinery required for the execution of the Works under the Contract, at his cost and shall use such methods and appliances for the purpose of all the operations connected with the Work covered by the Contract which shall ensure the completion of Work(s) within the specified Time for completion.

21.2 The Bidder shall submit as per Schedule `D', full details of construction equipment and machinery proposed to be deployed for the work(s) along with its planning schedule showing month wise phasing in accordance with the construction schedule i.e. Schedule `C'. The Schedule `E' submitted by the Bidder should conform to the Construction Schedule i.e. Schedule `C'. The Construction, equipment & machinery schedule as submitted shall be mutually discussed and finalised with the successful Bidder before signing of Contract Agreement and these shall form integral part of Contract. The Contractor shall deploy construction equipment and machinery as per agreed schedule. Provided further that in case of slow rate of Progress of Works, the Contractor should supplement the agreed schedule of equipment with additional equipment so as to ensure completion of Works within Time for Completion at no extra cost to Employer.

21.3 The Contractor shall not remove construction equipment, except for purpose of removing it from one part of the site to another, without written consent of the Engineer.

Provided always that any such approval of Construction equipment schedule in 21.2 shall not absolve the Contractor of his obligations for due execution of the Works within the Time for Completion as per the Contract.

CLAUSE 22: PATENT RIGHTS

The Contractor shall indemnify the Employer, its representatives or its employees against any action, claim or proceedings relating to infringement or use of any patent or design or any alleged patent or design rights and shall pay any royalties or other charges which may be payable in respect of any article or material or part thereof included in the Contract. In the event of any claim being made or action being brought against the Employer or any agent, servant or employee of the Employer in respect of any such matters as aforesaid, the Contractor shall immediately be notified thereof. Provided that such indemnity shall not apply when such infringement has taken place in complying with the specific directions issued by the Employer, but the Contractor shall pay any royalties or other charges payable in respect of any such use, the amount so paid being reimbursed to the Contractor only if the use was the result of any drawings and/or specifications issued after submission of the tender.

CLAUSE 23: MATERIALS

23.1 Subject to clause 31.2, the Contractor shall at his own expense provide/arrange all materials required for the bonafide use on work under the Contract.

23.2 All materials to be provided by the Contractor shall be in conformity with the Specifications laid down in the Contract and the Contractor shall furnish from time to time proof and samples, at his cost, of the materials as may be specified by the Engineer-in-Charge for his approval before use in the Works. The Engineer-in-Charge shall also have powers to have such tests, in addition to those specified in the Contract, as may be required and the Contractor shall carry out the same. The cost of materials consumed in such tests and also expenses incurred thereon shall be borne by the Contractor in all cases except when the materials are agreed to be issued by the Employer under the contract and also where such tests which are in addition to those provided in the Contract.

23.3 The Engineer-in-Charge or his representative shall be entitled at any time to inspect and examine any materials intended to be used in or on the works, either on the site or at factory or workshop or other place(s) where such materials are assembled, fabricated, manufactured, or at any place where these are lying or from where these are being obtained. For this purpose, the

Contractor shall afford such facilities as may be required for such inspection and examination.

23.4 The Engineer-in-Charge shall have full powers for removal of any or all materials brought to site by the Contractor, which are not in accordance with the Contract Specifications or samples, approved by him. Should the Contractor fail to remove the rejected materials, the Engineer-in-Charge shall be at liberty to have them removed by other means at the Contractor's cost. The Engineer-in-Charge shall have full power to procure other proper materials to be substituted at Contractor's costs.

23.5 It is a prime responsibility of the Contractor to arrange for all the materials.

23.6 Provisions contained hereinabove shall not in any way dilute the Contractor's liabilities under the Contract in any manner whatsoever.

CLAUSE 24: POWER SUPPLY

24.1 The Contractor shall make arrangements for the full anticipated requirement of construction power at his own risk and cost.

The Employer, if requested by the Contractor will provide assistance to the Contractor to obtain construction power from grid to meet part requirement as standby arrangement. Contractor will not have any claim, if construction power is not available from the grid or the quality or availability of Grid Power is not up to the mark. The Contractor will also be responsible for making all payments to the concerned authorities and will make no claims if the power is not available due to grid failure or otherwise.

24.2 The Contractor at his own cost, shall provide and install all necessary electrical installations and other temporary equipments for further distribution and utilization of energy for power and lighting and shall remove the same on completion of the Works. All jobs shall be suitably lighted by the Contractor at his own expenses for their proper execution and inspection in accordance with the provisions of laws in force.

24.3 No payment shall be made by the Employer for generation, distribution and consumption of electricity in execution of Works by the Contractor.

CLAUSE-25: SUPPLY OF WATER

The Contractor shall make his own arrangements for water required for and in connection with the work at his cost. It shall be the responsibility of the Contractor to satisfy himself that the water arranged by him is fit for construction & consumption & he shall adequately treat such water whenever it is not found fit for the said purposes.

CLAUSE-26: WATCHING AND LIGHTING

The Contractor shall provide and maintain at his expense all lights, guards, fencing and watching when and where necessary or as required by the Engineer-in-Charge for the protection of the works or for the safety and convenience of those employed on the works or the public.

CLAUSE 27: WORK DURING NIGHT OR ON SUNDAYS AND HOLIDAYS:

27.1 Subject to any provisions to the contrary contained in the Contract, the Contractor shall have the options to carry out the works continuously during night, Sunday or holidays, without any additional cost to Employer.

CLAUSE 28: SITE DRAINAGE, PROTECTION OF TREES AND PREVENTION OF NUISANCE

28.1 The Contractor shall, throughout the execution and completion of the Works and remedying of any defects therein have full regard for the safety of all persons entitled to be upon the Site and keep the Site (so far as the same is under his control) and the Works (so far as the same are not completed or occupied by the Employer) in an orderly state appropriate to the avoidance of danger to such persons.

28.2 The Contractor shall endeavor to protect from damage, the trees marked by the Engineer-in-Charge at the site of work or in the lands licensed to him for use under the contract. Where necessary, the Contractor shall provide at his expense temporary fencing to protect such trees. No tree shall be cut unless authorised by Engineer-in-Charge in writing to do so.

28.3 The Contractor shall at no time, cause or permit any nuisance on the site or cause any thing which shall cause unnecessary disturbance or inconvenience to the public in general and owners/tenants/occupants of adjacent properties.

CLAUSE 29: LABOUR

29.1 The Contractor shall employ labour in sufficient numbers to maintain the required rate of progress and quality to ensure workmanship of the degree specified in the Contract. The Contractor shall not employ in connection with the works any person who has not completed Fourteen years of age. The Contractor is encouraged, to the extent practicable and reasonable, to employ staff and labour with appropriate qualifications and experience from the region of the project. Unskilled labour shall be recruited from local region only.

29.2 The Contractor shall furnish and deliver fortnightly to the Engineer-in-Charge, a distribution return of the number and description by trades of the works of people employed on the works. The Contractor shall also submit on the 4th and 19th of every month to the Engineer-in-Charge a true statement showing in respect of the second half of the preceding month and the first half of the current month.

(i) The accidents that occurred during the said fortnight showing the circumstances under which they happened and the extent of damage and injury caused by them, and

(ii) The number of female workers who have been allowed maternity benefit as provided in the Maternity Benefit Act, 1961 or Rules made thereunder.

29.3 During continuance of the Contract, the Contractor and his sub-Contractors shall abide at all times by all existing labour enactments and rules made thereunder, regulations, notifications and bye laws of State or Central Government or local authority and any other labour law (including rules), regulations, bye laws that may be passed or notification that may be issued under any labour law in future either by the State or the Central Government or the local authority. The Contractor shall keep the Employer indemnified in case any action is taken against the Employer by the competent authority on account of contravention by the Contractor of any of the provisions of any Act or rules made thereunder, regulations or notifications including amendments. If the Employer is caused to pay or reimburse, such amounts as may be necessary to cause or observe, or for non-observance of the provisions stipulated in the notifications/bye laws/acts/rules/regulations including amendments, if any, on the part of the Contractor, the Engineer/Employer shall also have right to recover from the Contractor any sum required or estimated to be required for making good the loss or damage suffered by the Employer.

The employees of the Contractor and his sub-Contractor in no case shall be treated as the employees of the Employer at any point of time.

Some of the major labour laws that are applicable to construction industry are given below.

(i) Workmen Compensation Act 1923 as amended by Amendment Act No.65 of 1976.
(ii) Payment of Gratuity Act 1972
(iii) Employees PF and Miscellaneous Provision Act 1952 including FPS- 71/EPS-95.

(iv) Maternity Benefit Act 1961 (Amended)
(v) Contract Labour (Regulation and Abolition) Act 1970 with Rules framed there under as amended.
(vi) Minimum Wages Act 1948 (Amended)
(vii) Payment of Wages Act 1936 (Amended)
(viii) Equal Remuneration Act 1979
(ix) Payment of Bonus Act 1965 and Amendment Act No.43 of 1977 and No.48 of 1978 and any amendments thereof.
(x) Industrial Disputes Act 1947(Amended)
(xi) Industrial Employment (Standing Orders) Act 1946 (Amended)
(xii) Trade Unions Act 1926
(xiii) Child Labour (Prohibition and Regulation) Act 1986
(xiv) Inter-State Migrant Workmen's (Regulation of Employment and Conditions of Service) Act 1979
(xv) The Building and Other Construction Workers (Regulation of Employment and Conditions of Service) Act 1996 and the Cess Act of 1996
(xvi) The Personal Injuries (Compensation Insurance) Act, 1963 and any modifications thereof and rules made there under from time to time.

29.4 The Engineer-in-Charge shall on a report having been made by an authorised Inspecting Officer as defined in the Contract Labour (Regulation and Abolition) Act and Rules or on his own in his capacity as Principal Employer, have the power to deduct from the amount due to the Contractor any sum required or estimated to be required for making good the loss suffered by worker(s) by reasons of non-fulfillment of the conditions of the Contract for the benefit of workers, non-payment of wages or of deductions made by him from wages which are not justified by the terms of the contract or non-observance of the relevant Acts and Rules with amendments made from time to time. If the Employer makes payment to Contractor's labour due to non-payment of wages to labour by the Contractor, the Employer shall recover the amount thus paid from the next Interim Bill of the Contractor or any other dues of the Contractor along with 15% interest per annum and administration charges for the number of days the said amount remains outstanding.

29.5 The Contractor shall indemnify the Employer against any payments to be made under and for observance of the Regulations, Laws, Rules as stipulated in clause 29.4 above without prejudice to his right to claim indemnity from his sub-Contractors. In the event of the Contractor's failure to comply with the provisions of sub-clause 29.4 or in the event of decree or award or order against the Contractor having been received from the competent authority on account of any default or breach or in connection with any of the provisions of sub-clause 29.4 above, the Engineer-in-Charge, without prejudice to any other right or remedy under the Contract, shall be empowered

to deduct such sum or sums from the bills of the Contractor or from his Security Deposit or from other payments due under this contract or any other Contract to satisfy within a reasonable time the provisions of the various Acts/Laws/Rules/Codes as mentioned under sub-clause 29.4 above, on the part of the Contractor under the Contract on behalf of and at the expenses of the Contractor and make payment and/or provide amenities/facilities/services accordingly. In this regard, the decision of the Engineer-in-Charge shall be conclusive and binding on the Contractor.

29.6 The Contractor shall at his own expense comply with or cause to be complied with the Provisions/Rules provided for welfare and health of Contract Labour in the Contract Labour (Regulation & Abolition) Act and other relevant Acts and Rules framed thereunder or any other instructions issued by the Employer in this regard for the protection of health and for making sanitary arrangements for workers employed directly or indirectly on the works. In case, the Contractor fails to make arrangements as aforesaid, the Engineer-in-Charge shall be entitled to do so and recover the cost thereof from the Contractor.

29.7 The Contractor shall at his own expense arrange for the safety provisions as required by the Engineer-in-Charge, in respect of all labour directly or indirectly employed for performance of the Works and shall provide all facilities in connection therewith. In case the Contractor fails to make arrangements and provide necessary facilities as aforesaid, the Engineer-in-Charge shall be entitled to do so and recover the cost thereof from the Contractor. But this will not absolve the Contractor of his responsibility or otherwise thereof.

29.8 In the event of any injury, disability or death of any workmen in or about the work employed by the Contractor either directly or through his sub-Contractor, Contractor shall at all times indemnify and save harmless the Employer against all claims, damages and compensation under the Workmen Compensation Act, 1923 as amended from time to time or in other law for the time being in force and rules there under from time to time and also against all costs, charges and expenses of any smooth action by proceedings arising out of such accidents or injury, disability or death of a workmen and against all sum or sums which may with the consent of the Contractor be paid to compromise or compound any claim in this regard. If any award, decree or order is passed against the Contractor for recovery of any compensation under the Workmen Compensation Act, 1923, for any injury, disability or death of a workman by any competent court, the said sum or sums shall be deducted by the Engineer-in- charge from any sum then due or that may become due to the Contractor or from his Security

Deposit or sale thereof in full or part under the Contract or any other contract with the Employer towards fulfillment of the said decree, award or orders.

29.9 Provided always that the Contractor shall have no right to demand payments/claims whatsoever on account of his compliance with his obligations under this clause and Labour Regulation except those specifically mentioned in the clause 46 pertaining to Price Adjustment/Variation.

CLAUSE 30: REMOVAL OF CONTRACTOR'S MEN:

The Contractor shall employ on the execution of the Works only such persons as are skilled and experienced in their respective trades and the Engineer-in-Charge shall be at liberty to object to and require the Contractor to remove from the works any persons employed by the Contractor on the execution of the works who, in the opinion of the Engineer-in-Charge, misconducts himself or is incompetent or negligent in the proper performance of his duties. The Contractor shall forth-with comply with such requisition and such person shall not be again employed upon the works without permission of the Engineer-in-Charge. Any person so removed shall be replaced immediately.

CLAUSE 31: MATERIALS OBTAINED FROM EXCAVATION AND TREASURE, TROVE, FOSSILS ETC

31.1 Materials of any kind obtained from excavation on the site shall remain the property of the Employer and shall be disposed off as directed by the Engineer-in-Charge.

31.2 However, if any of the materials except stone thus obtained from excavation on the site is such as can be used in the execution of the work under the contract, the Contractor will be allowed to use the same free of cost (except that any amount of royalty, levies are paid by the Contractor) for the aforesaid purposes provided the same is found suitable and is approved by the Engineer-in-Charge.

31.3 Fossils, coins, articles of value, structures and other remains or things of geological or archeological interest discovered on the site shall be the absolute property of the Employer. The Contractor shall take reasonable precautions to prevent his labour or any other person from removing or damaging any such article or thing and shall immediately upon the discovery thereof and before removal acquaint the Engineer-in-Charge with such discovery and carry out the Engineer-in-Charge's directions as to the disposal of the same at the expense of the Employer.

CLAUSE 32: FORCE MAJEURE

32.1 The term "Force Majeure" shall herein mean riots (other than among the Contractor's employees), Civil Commotion (to the extent not insurable), war (whether declared or not), invasion, act of foreign enemies, hostilities, civil war, rebellion, revolution, insurrection, military or usurped power, damage from aircraft, nuclear fission, acts of God, such as earthquake (above 7 magnitude on Richter Scale), lightning, unprecedented floods, fires not caused by Contractor's negligence and other such causes over which the Contractor has no control and are accepted as such by the Engineer-in-Charge, whose decision shall be final and binding. In the event of either party being rendered unable by Force Majeure to perform any obligation required to be performed by them under this contract, the relative obligation of the party affected by such Force Majeure shall be treated as suspended for the period during which such Force Majeure cause lasts, provided the party alleging that it has been rendered unable as aforesaid, thereby shall notify within 10 days of the alleged beginning and ending thereof giving full particulars and satisfactory evidence in support of such cause.

32.2 On occurrence of Force Majeure, the liability of either party shall be dealt with, in accordance with the provisions of sub-clause 34.2

32.3 Should there be a request for extension of time arising out of "Force Majeure" the same shall be considered in accordance with clause 39.

CLAUSE 33: LIABILITY FOR DAMAGE, DEFECTS OR IMPERFECTIONS AND RECTIFICATIONS THEREOF:

33.1 If the Contractor or his labour or sub-Contractor injure, destroy or damage roads, fence enclosures, water pipes, cables, buildings, drains, electricity or telephone posts, wires, trees, grass line, cultivated land in the area in which they may be working or in the areas contiguous to the premises on which the work or any part of it is being executed or if any damage is caused during the progress of work, the Contractor shall upon receipt of a notice in writing in that behalf from the Engineer-in-Charge, make the same good at his costs.

33.2 If it appears to the Engineer-in-Charge or his representative at any time during construction or reconstruction or prior to the expiration of the Defects Liability period that any work has been executed with unsound, imperfect or unskilled workmanship or that any materials or articles provided by the Contractor for execution of the Works are unsound or of a

inferior quality, or otherwise not in accordance with the Contract, or that any defect, shrinkage or other faults found in the work arising out of defective or improper materials or workmanship, the Contractor shall, upon receipt of a notice in writing in that behalf from the Engineer-in-Charge, forthwith rectify or remove and reconstruct the work so specified in whole or in part, as the case may be, and/or remove the materials/articles so specified and provide other proper and suitable materials at his own expense.

33.3 If the Contractor fails to rectify, make good or remove and reconstruct the work as notified herein above, the Engineer-in-Charge shall have power to carry out such damages, defects or imperfections by any means or through any other agency or by himself at the risk and cost of the Contractor. In such a case the value of such rectification/replacement, reconstruction through such agencies shall be recovered from the Contractor from any amount due to him. The decision of Engineer-in-Charge in this regard shall be final and binding on the Contractor.

CLAUSE 34: CONTRACTOR'S LIABILITY AND INSURANCE

34.1 **From commencement to completion of the Work(s)** as a whole, the Contractor shall take full responsibility for the care thereof of work and for taking precautions to prevent any loss or damage. He shall be liable for any damage or loss that may happen to the Works or any part thereof and to the Employer's Plant, Equipment and Material (hired or issued to the Contractor). Any such loss or damage shall be restored in good order and condition and in conformity in every respect with the requirements of the Contract and instructions of the Engineer-in-Charge.

34.2 i) Neither party to the Contract shall be liable to the other in respect of any loss or damage which may occur or arise out of "Force Majeure" to the Works or any part thereof or to any material or article at site but not incorporated in the Works or to any person or anything or material whatsoever of either party provided such a loss or damage could not have been foreseen or avoided by a prudent person and the either party shall bear losses and damages in respect of their respective men and materials. Liability of either parties shall include claims/compensation of the third party also.

ii) Provided, however, in an eventuality as mentioned in sub-clause 34.2 (i) above, the following provisions shall also have effect:

(a) The Contractor shall, as may be directed in writing by the Engineer-in-Charge proceed with the erection and

completion of the works under and in accordance with the Contract; and

(b) The Contractor shall, as may be directed in writing by the Engineer-in-Charge, re-execute the works lost or damaged, remove from the site any debris and so much of the works as shall have been damaged and carry the Employer's T&P, Equipment, Material etc, to the Employer's stores. The cost of such re- execution of the works, removal of damaged works and carrying of Employer's store shall be ascertained in the same manner as for deviations and this shall be paid separately to the Contractor.

Provided always that the Contractor shall, at his own cost, repair and make good so much of the loss or damage as has been by any failure on his part to perform his obligations under the Contract or not taking precautions to prevent loss or damage or minimize the amount of such loss or damage.

34.3 The Contractor shall indemnify and keep indemnified the Employer against all losses and claims for death, injuries or damage to any person or any property whatsoever which may arise out of or in consequence of the construction and maintenance of works **during the Period for Completion** and also against all claims, demands, proceedings, damages, costs, charges and expenses whatsoever in respect of or in relation thereto, and such liabilities shall include claims/compensations of the third party.

34.4 Immediately after issuance of Letter of Acceptance the Contractor shall, without in any way limiting his obligations and responsibilities under this condition, insure and pay all costs and maintain the insurance premium throughout the period of Contract, with the following coverage:

(a) the Works, together with materials and Plant for incorporation therein, to the full replacement cost (the term "cost" in this context shall include profit also), (CAR / EAR Policy)

(b) an additional sum of 15 per cent of such replacement cost, to cover any additional costs of and incidental to the rectification of loss or damage including professional fees and the cost of demolishing and removing any part of the Works and of removing debris of whatsoever nature, (CAR / EAR Policy)

(c) the Contractor's Equipment brought at the Site by the Contractor in terms of Clause 13.1.2 iii of GCC., and

(d) the Contractor's workmen and public liability

34.5 Scope of Cover:

The insurance in paragraphs (a), (b) and (c) of Sub-Clause 34.4 shall be in the joint names of the Contractor and the Employer and shall cover:

(a) The Employer and the Contractor against all loss or damage from whatsoever cause arising other than as provided in Sub-Clause 34.6 from the Commencement date **until the date of issue of relevant Completion Certificate** in respect of the Works, and

(b) the Contractor for his liability:

(i) during the Defects Liability Period for loss or damage arising from a cause occurring prior to the commencement of the Defects Liability Period, and

(ii) or loss or damage occasioned by the Contractor in the course of any operations carried out by him for the purpose of complying with his obligations under Clauses 43.

34.6 There shall be no obligation for the insurances in Sub-Clause 34.4 to include loss or damage caused by:

(a) war, hostilities (whether war be declared or not), invasion act of foreign enemies.

(b) rebellion, revolution, insurrection, or military or usurped power, or civil war.

(c) ionizing radiations, or contamination by radio-activity from any nuclear fuel or from any nuclear waste from the combustion of nuclear fuel, radio-active toxic explosive or other hazardous properties of any explosive nuclear assembly or nuclear component thereof or(d) pressure waves caused by aircraft or other aerial devices traveling at sonic or supersonic speeds.

34.7 If the Contractor receives instructions from the Employer to insure against War Risk, such insurance if available shall be effected, at the cost of the Employer.

34.8 The Contractor shall, without limiting his or the Employer's ' obligations and responsibilities, insure, in the joint names of the Contractor and the Employer, against liabilities for death of or injury to any person or loss of or damage to any property (other than the Works) arising out of the performance of the Contract

for at least the amount stated here under:

(i) Public liability limits for bodily injury not less than ₹2, 50,000 and/or for death not less than ₹ 5,00,000 per person for each accident.

(ii) Property liability limits for each accident not less than ₹10, 00,000 (ten lacs).

The limit of total liability for death of or injury to any person or loss of or damage to any property (other than the Works) arising out of the performance of the Contract shall be 10 % of Contract Price as mentioned in **Schedule 'B'.**

34.9 The insurance policy shall include a cross liability clause such that the insurance shall apply to the Contractor and to the Employer as separate insured.

34.10 The Employer shall not be liable for in respect of any damages or compensation payable to any workman or other person in the employment of the Contractor or any sub-Contractor, other than death or injury resulting from any act or default of the Employer, his agents or servants. The Contractor shall indemnify and keep indemnified the Employer against all such damages and compensation, other than those for which the Employer is liable as aforesaid, and against all claims, proceedings, damages costs, charges and expenses whatsoever in respect thereof or in relation thereto.

34.11 The Contractor shall insure against such liability and shall continue such insurance during the whole of the time and that for any persons are employed by him on the Works. Provided that, in respect of any persons employed by any Sub Contractor, the Contractor's obligations to insure as aforesaid under this liability in respect of such persons in such manner that the Employer is indemnified under the policy, but the Contractor shall require such sub-Contractor to produce to the Employer, when required, such policy of insurance and the receipt for the payment of the current premium.

34.12 Immediately **but not later than 30 days issuance of letter of Award,** the Contractor shall provide the insurance policies to Engineer-in-Charge. Such insurance policies shall be consistent with the general terms agreed prior to the issue of the Letter of Acceptance. The Contractor shall affect all insurances for which he is responsible with insurers and in terms approved by the Employer.

34.13 The Contractor shall notify the insurers of changes in the nature, extent or Programme for the execution of the Works and ensure the adequacy of the insurances at all times in

accordance with the terms of the Contract and shall, when required, produce to the Employer the insurance policies in force and the receipts for payment of the current premiums.

34.14 If the Contractor fails to effect and keep in force any of the insurances required under the Contract, or fails to provide the policies to the Engineer-in-Charge within the period required by Sub-Clause 34.12 then and in any such case the Engineer-in-charge may affect the recovery of such premium(s) on pro-rata basis from the interim bills of the Contractor. Additionally the payment of interim bills may also be suspended until the Contractor complies with the requirements of sub clause 34.12 of these conditions. If non-insurance prolongs for a period of continuous 2 months, the Employer may treat it as Default of Contractor as per the provisions of clause 38 of GCC.

34.15 In the event that the Contractor or the Employer fails to comply with conditions imposed by the insurance policies affected pursuant to the Contract, each shall indemnify the other against all losses and claims arising from such failure.

34.16 The Contractor shall at his own expense arrange for the safety provisions as laid down in safety code of the Employer in respect of the works covered under this Contract. In case, the Contractor fails to comply with the provisions of the safety code, the Engineer-in-Charge shall be entitled to and make the necessary arrangement at the risk and cost of the Contractor. This will, however, not absolve the Contractor of his overall responsibility to execute the works under the Contract.

34.17 Deleted without change in Sr. No.

CLAUSE 35: SUSPENSION OF WORKS:

35.1 The Contractor shall on the order of the Engineer-in-Charge suspend the progress of the works or any part thereof for such time or times and in such manner as the Engineer-in-Charge may consider necessary and shall during such suspension properly protect and secure the work so far as is necessary in the opinion of the Engineer-in-Charge. If such suspension is:

(a) Provided for in the Contract, or

(b) necessary for the proper execution of the Works or by reason of weather conditions or by some default on the part of the Contractor, **or**

(c) necessary for the safety of the Works or any part thereof.

The Contractor shall not be entitled to extra costs (if any) incurred by him during the period of suspension of the works;

but in the event of any suspension ordered by the Engineer-in-Charge for reasons other than aforementioned and when each such period of suspension exceeds 14 days, the Contractor shall be entitled to such extension of Time for Completion of the Works as the Engineer-in-Charge may consider proper having regard to the period or periods of such suspensions and to such compensation as the Engineer-in-Charge may consider reasonable in respect of salaries or wages paid by the Contractor to his employees during the periods of such suspension.

35.2 If the progress of works or any part thereof is suspended on the order of the Engineer-in- Charge for more than three months at a time the Contractor may serve a written notice on the Engineer-in-Charge requiring permission within 15 days from the receipt thereof to proceed with the Works or that part thereof in regard to which progress is suspended and if such permission is not granted within that time the Contractor by a further written notice so served may (but is not bound to) elect to treat the suspension where it affects part only of the Works as an omission of such part or where it affects the whole of the Works as an abandonment of the Contract by the Employer.

CLAUSE 36: FORECLOSURE OF CONTRACT IN FULL OR IN PART DUE TO ABANDONMENT OR REDUCTION IN SCOPE OF WORK

36.1 If at any time after issuance of Letter of Award the Employer decides to abandon or reduce the scope of the Works for reason whatsoever and hence does not require the whole or any part of the Works to be carried out, the Engineer-in-Charge shall give notice in writing to that effect to the Contractor, and the Contractor shall have no claim to any payment of compensation or otherwise whatsoever, on account of any profit or advantage which he might have derived from the execution of the Works in full but which he could not derive in consequence of the fore-closure of the whole or part of the Works.

The Contractor shall be paid at Contract rates for full amount of the Works executed at Site and, in addition, a mutually agreed reasonable amount as certified by the Engineer-in-Charge for the items hereunder mentioned which could not be utilised on the Works to the full extent because of the foreclosure:

(a) Any expenditure incurred on preliminary works, e.g. temporary access roads, temporary labour huts, staff quarters and site office; storage accommodation workshop, installation and dismantling of Construction Equipment (batching plant, crushing plant) and water storage tanks.

(b) i) The Employer shall have the option to take over Contractor's materials or any part thereof, either brought to site or of which the Contractor is legally bound to accept delivery from suppliers (for incorporation in or incidental to the Work), provided, however, the Employer shall be bound to take over the material or such portions thereof as the Contractor does not desire to retain. The cost shall, however, take into account purchase price, cost of transportation and deterioration or damage which may have been caused to materials whilst in the custody of the Contractor.

ii) For Contractor's materials not retained by the Employer, reasonable cost of transporting such materials from Site to Contractor's permanent stores or to his other Works, whichever is less. If materials are not transported to either of the said places, no cost of transportation shall be payable.

(c) Reasonable compensation for transfer of T&P from Site to Contractor's permanent stores or to his other works whichever is less. If T&P are not transported to either of the said places, no cost of outward transportation shall be payable.

36.2 The Contractor shall, if required by the Engineer-in-Charge, furnish to him books of account, wage books, time sheets and other relevant documents as may be necessary to enable him to certify the reasonable amount payable under this condition.

36.3 In the event of foreclosure of the Contract, the advances released to the Contractor shall be recovered/adjusted by en-cashing Bank Guarantees submitted by the contractor against the advances, in appropriate proportion as due to the Employer.

CLAUSE 37: TERMINATION OF CONTRACT ON DEATH:

If the Contractor is an individual or a proprietary concern and the individual or the proprietor dies, or if the Contractor is a partnership concern and one of the partners dies, then, unless the Engineer-in-Charge is satisfied that the legal representatives of the individual Contractor or of the proprietor of the proprietary concern and in the case of partnership, the surviving partners are capable of carrying out and completing the Contract, the Engineer-in-Charge shall be entitled to terminate the Contract as to its uncompleted part without the Employer being in any way liable to payment of any

compensation whatsoever on any account to the estate of the deceased Contractor and/or to the surviving partners of the Contractor's firm on account of termination of the Contract. The decision of the Engineer-in-Charge that the legal representatives of the deceased Contractor or the surviving partners of the Contractor's firm cannot carry out and complete the Works under the Contract shall be final and binding on the parties. In the event of such termination, the Corporation shall not hold the estate of the deceased Contractor and/or the surviving partners of the Contractors firm liable for damages for not completing the Contract. Provided that the power of the Engineer-in-Charge of such termination of contract shall be without prejudice to any other right or remedy, which shall have accrued or shall accrue to him under the Contract.

CLAUSE-38: DEFAULT BY THE CONTRACTOR AND TERMINATION OF CONTRACT IN FULL OR IN PART:

38.1 If the Contractor:

i) commits default in complying with or commits breach of any of the conditions of the Contract and does not remedy it or take effective steps to remedy it immediately after a notice in writing is given to him by the Engineer-in-Charge; or

ii) fails to complete the Works or any item of Works within the time specified in Schedule 'A' or any extended time under the Contract and does not complete the Work(s) or any item of Work(s) within the period specified in a notice given in writing by the Engineer-in-Charge; or

iii) is engaged in corrupt or fraudulent practices in competing for or in the execution of the Contract. For the purpose of this clause

a) 'Corrupt Practice' means offering, giving, receiving or soliciting of any thing of value to influence the action of a public official in the procurement or execution of Contract.

b) 'Fraudulent Practice' means mis-representation of fact in order to influence the tendering process or the execution of a Contract and includes collusive practice among bidders (prior to or after bid submission) designed to establish bid prices at artificial non-competitive levels and to deprive the employer of the benefits of free and open competition.

iv) being an individual, or if a firm, any partner thereof, shall at any time be adjudged insolvent or have a receiving order or order for administration of his estate made against him or

shall take any proceedings for liquidation for the purpose of amalgamation or reconstruction under any insolvency Act for the time being in force or make any conveyance or assignment of his effective or composition or arrangement for the benefit of his creditors or purport as to do, or if any application be made under any insolvency Act for the time being in force for the sequestration of his estate or if a trust deed be executed by him for benefit of his creditors; or

v) being a company shall pass a resolution or the Court shall make an order for the liquidation of its affairs or a receiver or manager on behalf of the debenture holders shall be appointed or circumstances shall arise which entitle the Court or debenture holders to appoint a receiver or manager; or

vi) shall suffer an execution in an execution being levied on his goods; or

vii) assigns, transfers, sublets (engagement of labour on a piece-work basis or of labour with materials not being incorporated in the work shall not be deemed to be subletting) or attempts to assign, transfer or sublet the entire works or any portion thereof without the prior written approval of the Engineer-in-Charge.

The Engineer-in-Charge shall have powers to terminate the Contract in full or in part as aforesaid without prejudice to any other right or remedy which shall have accrued or shall accrue of which cancellation notice in writing to the Contractor under the hand of the Engineer- in-Charge shall be conclusive evidence.

38.2 The Engineer-in-Charge shall, on such termination of the contract, have powers to take possession of the site of work under the contract as well as the land/premises allotted to the Contractor for his preliminary, enabling and ancillary works and any materials, constructional equipment, implements, stores, structures etc. thereon. The Engineer-in-Charge shall also have powers to carry out the incomplete work by any means or through any other agency or by himself at the risk and cost of the Contractor. In such a case, the value of the work done through such agencies shall be credited to the Contractor at the contract rate and the Contractor shall pay the excess amount, if any, incurred in completing the work as aforesaid, as stipulated under sub-clause 38.4 hereunder.

38.3 On termination of the Contract in full or in Part, the Engineer-in-Charge may direct that a part or whole of such plant, equipment and materials, structures be removed from the site of the work as well as from the land/premises allotted to the

Contractor for his preliminary, enabling and ancillary works, within a stipulated period. If the Contractor shall fail to do so within the period specified in a notice in writing by the Engineer-in-Charge, the Engineer-in-Charge may cause them to be sold, holding the net proceeds of such sale to the credit of the Contractor, which shall be released after completion of works and settlement of amounts under the Contract.

38.4 If the expenses incurred or to be incurred by the Employer for carrying out and completing the incomplete work or part of the same, as certified by the Engineer-in-Charge, are in excess of the value of the work credited/to be credited to the Contractor, the difference shall be paid by the Contractor to the Employer. If the Contractor fails to pay such an amount, as aforesaid, within thirty days of receipt of notice in writing from the Engineer-in-Charge, the Engineer-in-Charge shall recover such amount from any sums due to the Contractor on any account under this or any other contract or from his Security Deposit or otherwise.

38.5 The Engineer-in-Charge shall have the right to sell any or all the Contractor's unused materials, constructional equipment, implements, temporary buildings/structures etc. and apply the proceeds of sale thereof towards the satisfaction of any sums due from the Contractor under the Contract and if thereafter there may be any balance outstanding from the Contractor, the Engineer-in-Charge shall have powers to recover the same as debt.

38.6 All decisions/actions of the Engineer-in-Charge under this clause, as aforesaid, shall be conclusive and binding on the Contractor.

CLAUSE 39: TIME FOR COMPLETION AND EXTENSIONS:

39.1 Time for Completion allowed for execution of the Works is as specified in Schedule `B' of these conditions.

39.2 However, if the work is delayed on account of:

i) Delay in handing over of site to the Contractor as per clause 12; or

ii) Increase in the quantity of work to be done under the Contract as per clause 18; or

iii) Suspension of work as per clause 35; or

iv) Rebuilding of work as per clause 34; or

v) "Force Majeure" as per clause 32 or

vi) Any other cause which, in the opinion of the Engineer-in-

Charge is beyond the Contractor's control;

then, immediately upon the happening of any such event as aforesaid, the Contractor shall inform the Engineer-in-Charge accordingly, but the Contractor shall nevertheless use constantly his best endeavors to prevent and/or make good the delay and shall do all that may be required in this regard. No extension in time on account of rains shall be admissible. The Contractor shall request, in writing, for extension of time, to which he may consider himself eligible under the Contract, within fourteen days of the date of happening of any such events as indicated above.

Provided further that no monetary claims shall be admissible to the Contractor for such extension of Time for Completion except for Price Adjustment in accordance with clause-46 and reimbursement of cost of extension of bank guarantee for Security Deposit (i.e. Performance security deposit and retention money) and Insurance Policy(ies).

39.3 In any such case as may have arisen due to any of the events, as aforesaid, and which shall be brought out by the Contractor in writing, the Engineer-in-Charge may give a fair and reasonable extension of Time for Completion, after taking into consideration the nature of the work delayed and practicability of its execution during the period of extension. Provided in the event of non-receipt of a request for such extensions from the Contractor for reasons whatsoever, the Engineer-in-Charge may, at his sole discretion and with due regard to the event, grant fair and reasonable extension of time sue motto.

Such extensions, if admissible, shall be communicated to the Contractor by the Engineer-in-Charge in writing.

Provided that Engineer-in–Charge is not bound to make any determination unless the Contractor has;

a) within 14 days after such event has first arisen notified the Engineer and

b) within 28 days or such other reasonable time as may be agreed by the Engineer–in–Charge detailed particulars of any extension of Time for Completion to which the Contractor may consider himself entitled .

CLAUSE 40: COMPENSATION FOR DELAY:

40.1 If the Contractor fails to complete all items of work(s) in respect of any of Milestone and/or Work as a whole, as the case may be and as specified in Schedule `A' before the expiry of the period(s) of completion as stipulated in the aforesaid Schedule or any extended period under Clause 39 as may be allowed, he shall without prejudice to any other right or remedy of the Employer

on account of such default, pay as an ascertained/agreed compensation (Liquidated Damages) not by way of penalty; such amount as stipulated in the aforesaid Schedule `A'.

40.2 The amount of Liquidated Damages /compensation may be adjusted/withheld/ deducted or set-off against any sum due or payable to the Contractor under this or any other contract with the Employer. The payment or deduction of such damages shall not relieve the Contractor from his obligation to complete the Works or from any other obligations and liabilities under the Contract

40.3 Should, however, the Contractor achieve the completion of the Works as a whole under the Contract within the time as stipulated in Schedule `B' or in the extended time as may be accorded, the Employer will refund to him the amount of compensation recovered from him, if any, in respect of delay in the non-completion of work(s) under the individual Milestone, as aforesaid in full. However, no interest on refund of amount of compensation as above shall be payable to the Contractor.

40.4 In case the compensation for delay (Liquidated Damages) are levied on account of delay in preceding Milestones and if contractor achieves the milestone within the specified schedule (as mentioned in Schedule-A) and also achieves all the delayed preceding Milestones by that date, then the compensation already levied for all delayed preceding Milestones shall be refunded in next payment. However, no interest on refund of delay damages as above shall be payable to the contractor.

CLAUSE 41: INSPECTION AND APPROVAL

41.1 All works embracing more than one process shall be subject to examination and approval at each stage thereof and the Contractor shall give due notice to the Engineer-in-Charge or his authorized representative, when each stage is ready. In default of such notice, the Engineer-in-Charge shall be entitled to appraise the quality and extent thereof and the decision of the Engineer-in-Charge in this regard shall be final and binding.

41.2 No work shall be covered or put out of view without the approval of the Engineer-in-Charge or his authorized representative and the Contractor shall afford full opportunity for examination of foundations before permanent work is placed thereon. The Contractor shall give due notice to the Engineer-in-Charge or his authorized representative whenever any such work or foundation is ready for examination and the Engineer-in-Charge or his representative shall, without unreasonable delay, unless he considers it unnecessary and advises the Contractor accordingly, examine and measure such work or such

foundations. In the event of the failure of the Contractor to give such notice, he shall, if required by the Engineer-in-Charge, uncover such work at the Contractor's expense.

41.3 The Engineer-in-Charge or his representative shall have powers at any time to inspect and examine any part of the Works and Contractor shall give such facilities as may be required for such inspection and examination.

41.4 The Contractor shall uncover any part of the works and/or make opening in or through the same as the Engineer-in-Charge may from time to time direct for his verification and shall reinstate and make good such part to the satisfaction of the Engineer-in-Charge. If any such part has been covered up or put out of view after being approved by the Engineer-in-Charge and is subsequently found, on uncovering, to be executed in accordance with the Contract, the expenses of uncovering and/or making openings in or through, reinstating and making good the same, shall be borne by the Employer. In any other causes all such expenses shall be borne by the Contractor.

CLAUSE 42: COMPLETION CERTIFICATE:

42.1 The Work shall be completed to the entire satisfaction of the Engineer-in-Charge and in accordance with the time mentioned in Schedule `B' and terms and conditions mentioned in clause-39. As soon as the Works under the Contract is completed as a whole, the Contractor shall give notice of such completion to the Engineer-in-Charge. The Engineer-in-Charge, within two week of receipt of such notice, shall inspect the Work and shall satisfy himself that the Work(s) has been completed in accordance with the provisions of the Contract and then issue to the Contractor a certificate of completion indicating the date of completion. Should the Engineer-in-Charge notice that there are defects in the Works or the Works are not considered to be complete, he shall issue a notice in writing to the Contractor to rectify/replace the defective Work or any part thereof or complete the work, as the case may be, within such time as may be notified and after the Contractor has complied with as aforesaid and gives notice of completion, the Engineer-in-Charge shall inspect the Work and issue the completion certificate in the same manner as aforesaid.

42.2 The certificate of completion shall neither be issued as stipulated under 42.1 above nor Work be considered to be completed unless the Contractor shall have removed from the Work site and/or premises all his belongings/temporary arrangements brought/made by him for the purpose of execution of the work and clean the site and/or premises in all respects and made the whole of the site and or premises fit for immediate occupation/use to the satisfaction of the Engineer-in-Charge. If the Contractor fails to comply with the above

mentioned requirements on or before the date of completion of the Work, the Engineer-in-Charge, may, as he thinks fit and at the risk and cost of the Contractor, fulfill such requirements and remove/dispose off the Contractor's belongings/temporary arrangements, as aforesaid, and the Contractor shall have no claim in this respect except for any sum realized by the sale of Contractor's belongings/temporary arrangements less the cost of fulfilling the said requirements and any other amount that may be due from the Contractor. Should the expenditure on the aforesaid account exceed the amount realised by sale of such Contractor's belongings/temporary arrangements than the Contractor shall on demand, pay the amount of such excess expenditure.

CLAUSE 43: DEFECTS LIABILITY PERIOD:

43.1 The "Defects Liability Period" for the entire work under the Contract shall be as indicated under 'Schedule B'.

43.2 If during the Defects Liability Period any portion of the Works is found defective or deficient in any manner and is repaired/rectified/replaced pursuant to the defects liability provisions of the Contract, the Defects Liability Period for such portion of the Works, shall, notwithstanding anything to contrary contained herein, be operative for a further period of 6 months from the date of such repair/rectification/ replacement but shall not in any case be operative for more than 18 months from the date of completion stated in the Completion Certificate.

CLAUSE 44: MEASUREMENTS:

44.1 The Engineer-in-Charge shall except as otherwise stated ascertain and determine by measurement, the value of work done in accordance with the Contract.

44.2 Notwithstanding any provision in the relevant standard method of measurement or any general or local custom, measurement of work done under the Contract shall be taken in accordance with the procedure set forth in the Technical Specifications or Bill of Quantities under the Contract. In the case of items of Work, which are not covered by the Technical Specifications or Bill of Quantities, measurement shall be taken in accordance with the relevant standard methods of measurements laid down by the Bureau of Indian Standards (BIS).

44.3 All items having a financial value shall be entered in measurement book, level book, etc., prescribed by the Employer so that a complete record is maintained of all work performed under the Contract.

44.4 Measurement shall be taken jointly by the Engineer-in-Charge or his representative and by the Contractor or his authorised representative.

44.5 Before taking measurement of any works, the Engineer-in-Charge or his representative, shall give a reasonable notice to the Contractor. If the Contractor fails to attend or send an authorised representative for measurement after such a notice or fails to countersign or to record the objection within a week from the date of taking the measurements, then in that event the measurements taken by the Engineer-in-Charge shall be taken to be correct and final measurements of such work.

44.6 The Contractor shall, without extra charge, provide assistance with every appliance, labour and other appliances (theodolite, level etc.) and things necessary for measurement.

44.7 Measurement shall be signed and dated by both parties on the Site on completion of measurement. If the Contractor objects to any of the measurements recorded by the representative of the Engineer-in-Charge, a note to that effect shall be made in the measurement book against the item objected to and such note shall be signed and dated by both parties engaged in taking the measurement. The decision of the Engineer-in-Charge on any such dispute or difference or interpretation shall be final and binding on the Contractor in respect of all contract items, substituted items, extra items and deviations. Provided that items of Work which are not susceptible to measurement at the later date must be measured jointly and signed accordingly by both the parties at the time of execution of such items.

CLAUSE 45: PAYMENT ON ACCOUNT:

45.1 Running Account / Interim bills shall be submitted by the Contractor monthly on or before the date fixed by the Engineer-in-Charge for the work executed after compliance of all statuary provisions and complete in terms of contract conditions. The Engineer-in-Charge shall then verify the bills with reference to the measurements recorded in the measurement book(s).

45.2 Payment on account for amount admissible shall be made on the Engineer-in-Charge certifying the sum to which the Contractor is considered entitled by way of interim payment for the work executed, after deducting there from the amounts already paid, the Retention Money and such other amounts as may be withheld/deductable or recoverable in terms of the Contract.

45.3 Payment of the Contractor's bills shall be made by the Employer within 30 days from the date of submission of the bill subject to the acceptance of the Engineer-in-Charge and in accordance with clause 45.10.

45.4 Payments due to the Contractor shall be made **through electronic mode for which the Contractor will provide the complete bank details viz. Beneficiary's name, account no., Bank name and address of bank, RTGS code etc. to the Engineer-in-Charge or his representative.**

45.5 Any interim bills given relating to work done or materials delivered, may be modified or corrected by any subsequent interim bills or by the final bill. No certificate(s) of the Engineer-in-Charge supporting an interim payment shall itself be conclusive evidence that any work or materials to which it relates is/are in accordance with the Contract.

45.6 Should there be a request for Extension of Time for completion, pending its consideration, interim payments shall continue to be made as provided herein. Such payment shall be without prejudice to right of the Employer to levy Liquidated Damages on the Contractor in terms of provisions of Contract.

45.7 If the payment due to the Contractor for any undisputed amount for which interim bill has been approved by the Engineer – in – Charge, is delayed by more than **15 days** from the due date of payment (i.e. **45 days** from date of submission of bill) an interest @ of 8% per annum (as mentioned in schedule 'B') and acceptance thereof by Engineer in Charge, shall be payable to the Contractor for the actual number of days of delay in payment of bill beyond the above said period of **15 days**.

in case of Micro & Small Enterprise (MSE) following provision shall apply :

All the payments for the supplies and/or services (as applicable) rendered by MSEs (Micro & Small Enterprises) supplier/Contractor under the contract shall be released within forty five (45) days from the day of acceptance, subject to submission of invoice on or before the day of acceptance.

Day of acceptance means day of actual delivery of Plant or the rendering of services; or where any objection is made in writing by SJVN regarding acceptance of Plant or service within fifteen days from the date of delivery of Plant or the rendering of services, the day on which such objection is removed by the contractor/supplier.

In case payments are not released as mentioned above, SJVN shall pay the principal amount plus compound interest with monthly rests from the date immediately following the date agreed upon @ three times of bank rates as notified by Reserve Bank of India from time to time.

45.8 In case of disputed items for which payment has been withheld,

the Engineer-in-Charge will intimate to the Contractor in writing the details of such disputed items. The Contractor shall submit in writing the clarifications / modifications in regard to this disputed items to the Engineer-in-Charge. After such clarifications / modifications and acceptance thereof by the Engineer-in-Charge, payment of such disputed items shall be released within 30 days thereafter. **No interest shall be paid for the disputed amounts of items till the same is resolved and accepted by Engineer-in-charge as above.** Interest for delayed payment for such amounts shall be regulated in accordance with clause 45.7 after treating above said **30 days** mentioned in this clause as due date of payment.

45.9 With respect to material and Plant brought by the Contractor to the Site for incorporation in the Permanent Works, the Contractor shall receive a credit in the month in which these materials and Plant are brought to the Site and be charged a debit in the month in which they are incorporated in the Permanent Works, both such credit and debit to be determined by the Engineer-in-Charge in accordance with the following provisions:

(a) no credit shall be given unless the following conditions shall have been met to the Engineer-in-Charge's satisfaction:

(i) the materials and Plant are in accordance with the Specifications for the Works.

(ii) the materials and Plant have been delivered to the Site and are properly stored and protected against loss, damage, or deterioration;

(iii) the Contractor's record of the requirements, order, receipts and use of materials and Plant are kept in a form approved by the Engineer, and such records are available for inspection by the Engineer.

(iv) the Contractor has submitted a statement of his cost of acquiring and delivering the materials and Plant to the Site, together with such documents as may be required for the purpose of evidencing such cost ;

(v) The materials are to be used within a reasonable time.

(b) the amount to be credited to the Contractor shall be the equivalent of **80 percent** of the Contractor's reasonable cost of materials and Plant delivered to the Site, as determined by the Engineer-in-Charge after review of the documents listed in sub-para (a)(iv) above but not more than the unit price mentioned in the Bill of Quantity;

(c) The amount to be debited to the Contractor for any materials and Plant incorporated into the Permanent Works shall be equivalent to the credit previously granted

to the Contractor for such materials and Plant pursuant to Sub-Clause(b) above, as determined by the Engineer-in-Charge.

45.10 (i) Based on the examination of the statement and supporting documents submitted by the Contractor in respect of Interim Payment Certificate, **75%** of the admissible gross value of the Interim Payment Certificate on provisional basis within **7 days** of the Engineer receives the statement and supporting documents and after taking into account all recoveries including retention amount on 100 % of the value of Interim Payment Certificate. All the statutory deductions will be carried out on the certified amount payable to the Contractor.

(ii) Balance **25%** payment within 30 days after the date of receipt of the statement in accordance with clause 45.3 & 45.7 and after taking into account of balance adjustment, statutory deductions & recoveries, if any. In case it is discovered that the Contractor has billed excess amount than that admissible and amount released by the Engineer in **7 days** as (i) above was more than 100% of the admissible amount, the Employer shall charge and recover interest on the amount in excess of **75%** of the net payment due from the next payment to the Contractor at the interest rate of 18 % p.a. simple rate of interest, whichever is higher for the number of days the excess amount was with the Contractor reckoned from the date of its actual payment till the adjustment / recovery of the same. In case of such events becoming repetitive, the Engineer shall withdraw such a facility of provisional payment and the Contractor shall have no claim whatsoever against the Employer.

(iii) Next 75 % provisional payment shall be made only after **100 %** payment of one out of preceding two (2) Interim Payment Certificates has been adjusted.

CLAUSE 46: PRICE ADJUSTMENT/VARIATIONS: Not Applicable

46.1 The amounts payable to the Contractor shall be adjusted for rises or falls in the cost of labour, goods and other inputs to the Works, by the addition or deduction of the amounts determined by the formulae prescribed in this Clause.

The adjustments shall be determined from the following formulae for payment :

$$Pn = a + b\, En/Eo + c\, Mn/Mo + dCn/Co + eSn/\, So + f\, Ln/\, Lo + gUn/Uo.$$

Where, "Pn" is the price adjustment multiplier to be applied to the amount for the payment of BOQ items of the works carried out in period "n", this period being a month.

"a" is a fixed coefficient, representing the non-adjustable portion in contractual payments; and "b", "c", "d", "e", "f" and "g" are coefficients representing the estimated proportion of each cost

element related to the execution of the Works, as stated in Table below.

"En", "Mn", "Cn", "Sn" , "Ln" and "Un" are the current cost indices or reference prices of the cost elements in INR for period "n", each of which is applicable to the relevant tabulated cost element on the date 28 days prior to the last day to which the particular monthly payment certificate relates; and

""Eo", "Mo", "Co", "So", "Lo" and "Uo" are the base cost indices or reference prices of the cost elements in INR, each of which is applicable to the relevant tabulated cost element on the Base date, 28 days prior to the month in which price bid is submitted.

The cost indices and value of the coefficients for the different cost inputs stated in the Table below shall be used.

Table

Index Code	**Index Description**	**Source of Indices**	**Pre-determined Weightings**
a	Non adjustable		a: **0.15**
E	Fuel & Lubricant	Official retail price (inclusive of taxes/ duties) of High Speed diesel oil at outlet of Indian Oil Corporation ***at Jeori (Shimla)***	b: _____
M	Materials (all commodities)	Index numbers of Wholesale Prices in India – by Groups & Sub-Groups (Base 2011-12 = 100) published by Economic Advisor, Ministry of Industry, Govt. of India under the Head : 'All Commodities'.	c: _____
C	Cement (Manufacture of Cement, Lime and Plaster)	Index numbers of Wholesale Prices in India – by Groups & Sub-Groups (Base 2011-12 = 100) published by Economic Advisor, Ministry of Industry, Govt. of India under the head '(M). Manufacture of Other Non-Metallic Mineral Products i.e. Manufacture of Cement, Lime and Plaster.	d: _____
S	Steel (Mild Steel – Long Products)	Index numbers of Wholesale Prices in India – by Groups & Sub-Groups (Base 2011-12 = 100) published by Economic Advisor, Ministry of Industry, Govt. of India under the head '(N). Manufacture of Basic Metals' and Sub-head 'd. Mild	e: _____

		Steel-Long Products.	
L	Labour Skilled	All India Consumer Price Index for Industrial Workers, General Index base (2016=100) as published in the Indian Labour Journal of "Labour Bureau" by Ministry of Labour, Govt. of India.	f: _____
U	Labour Un-Skilled	Minimum Wages applicable for Un-Skilled labourer as notified by the Department of Labour and Employment of Centre/State Government.	g: _____

If at any time the current indices are not available, provisional indices as determined by the Engineer in Charge will be used, subject to subsequent correction of the amounts paid to the Contractor when the current indices become available.

In case of Government of India or other applicable source, stops publishing price indices of any of the prescribed cost element at any time and announces a new series with a linking factor for conversion of Index of new series to the old series, regulation of price adjustment shall be done using the indices of new series along with linking factor from the period the indices of old series becomes unavailable. However, if the new series released by the relevant source does not have the linking factor, the new series shall be used without use of linking factor from the date indices of old series becomes unavailable.

Any increase, direct or indirect, in the cost of construction due to any increase in minimum wage or increase in provision of labour amenities and benefits in excess of those applicable on the Base Date shall not be payable to the Contractor separately under Clause 47.2 except as per provisions of this price adjustment clause.

46.2 Provided further that adjustments on account of above as provided in sub-clause 46.1shall be subject to the following:

(a) In the case of material brought to site for which any secured advance is included in the Interim Bill according to Clause 45.9, the amount of such secured advance considered as a credit shall be added to the value of work done and payable during the month under review (excluding those Extra, additional, substituted and altered items of work, whose rates are based on actual analysis on the current market rates) for operation of this clause. Similarly, when such material are incorporated in the work and the secured advance is debited, the amount of secured advance originally considered for operation of this clause should be deducted from the value of work done.

b) Price Escalation shall be applicable only for the work that is carried out within the Time for Completion as in Schedule `B' or extended time if any under clause 39 of GCC for which no damages are leviable on the Contractor.

c) Price Escalation shall not be operable during the period for which extension of Time for Completion is not granted under Clause 39.

d) Variations arising on account of payment related to rates for Extra, Altered and Substituted items whose cost has been worked out on actual analysed cost or on market price basis as envisaged in Clause 18.2 shall be regulated with reference to such variations in cost as are subsequent to the date of settlement of the rates, instead of the date of submission of price bids.

e) No separate escalation whatsoever shall be payable for reimbursement of any statutory or otherwise, increase in customs duty, excise duty, sales tax, octroi, Dharat etc. on materials and on labour under Clause 47.2 required for the execution of the work over and above the provisions made in this clause.

f) No claims whatsoever for the Price Adjustments/ Variations due to increase in cost of labour, material and machinery of whatsoever nature and due to whatsoever reason other than those stipulated above shall be entertained, save and except the provision made in clause 47.

46.3 To the extent that full compensation for any rise or fall in costs to the Contractor is not covered by the provisions of this or other Clauses in the Contract, the unit rates and prices included in the Contract shall be deemed to include amounts to cover the contingency of such other rise or fall of costs.

46.4 Subject to provisions of sub-para 46.1 and 46.2 above, provisional monthly payments on account of Price Variation on contract rates will be made to the Contractor alongwith the monthly bill for works on the basis of latest available provisional price indices and the same shall be adjusted as and when the final indices of that period are available.

46.5 If the Contractor fails to complete whole of the Works within the Time for Completion, adjustment of prices thereafter until the date of completion of the Works shall be made using either the indices or prices relating to the prescribed Time for Completion, or the current indices or prices, whichever is more favourable to the Employer, provided that if an extension of time is granted pursuant to Clause 39 the above provision shall apply only to adjustments made after the expiry of such extension of time.

46.6 The price variation formula will not be admissible, where the resultant increase is lower than or equal to one (01) percent of

the contract price, no price adjustment will be made in favour of the supplier/Contractor. However, decrease , if any shall be regulated as per 46.1 above.

46.7 The maximum ceiling under positive/upward price variation clause shall be 20% of the total contract price. There shall be no ceiling for negative/ downward price variation.

46.8 Where deliveries are accepted beyond the scheduled delivery date subject to levy of liquidated damages as provided in the contract. The LD (if a percentage of the price) will be applicable on the price as varied by the operation of the PVC.

46.9 No upward price variation will be admissible beyond the original scheduled delivery date for defaults on the part of the supplier. However, a downward price variation would be availed by the purchaser as per the denial clause in the letter of extension of the delivery period.

46.10 Price variation may be allowed beyond the original scheduled delivery date, by specific alteration of that date through an amendment to the contract in cases of force majeure or defaults by Government/purchaser.

46.11 An undertaking should be obtained from the contractor to the following effect in case, it becomes necessary to make the final payment before he/contractor submitted the required data/documents related to the PVC:

"It is certified that there has been no decrease in the price of price variation indices and, in the event of any decrease of such indices during the currency of this contract, we shall promptly notify this to the purchaser and offer the requisite reduction in the contract rate."

46.12 The above price adjustment clause shall not be applicable for the works having original time of completion up to 18 months. However in case the time of completion of such contract is extended beyond 18 months due to the reasons not attributable to the contractor the price adjustment in respect of value of works carried out beyond 18 months will be regulated as under:

a) if the time of completion extended beyond 18 months price adjustment will be applicable for the value of the works carried out beyond 18 (eighteen) months and the same shall governed in accordance with the clause 46.1 to 46.11. The base cost indices/ reference price shall be as applicable on the date of the expiry of 18 months as mentioned above.

CLAUSE 47: TAXES, DUTIES AND LEVIES ETC:

47.1 All existing taxes, duties, levies, royalty or any other fee etc. that

may be levied in accordance with laws and regulation in force as on 28 days before the last date of submission of price bid and the Contractor shall pay on the Contractor's Equipment, Plant, materials and consumables acquired for the performance of the Contract shall be exclusively payable by the Contractor, and the Employer shall not entertain any claim in this regard. The rate/prices quoted by the Contractor shall be deemed to be inclusive of all such taxes, duties, levies, royalty, etc. However, payment in respect of taxes will be regulated in terms of statutory provisions prevailing while releasing the same. Any statutory variation in the rate of aforesaid taxes/duties/levies/royalty if any, during the Time for Completion of the Contract shall be to the account of Employer provided the amount thus claimed is not covered in indices or prices under price variation clause 46 of these conditions.

47. 2 "However, if a New Tax or Duty or Levy, other than those existing on 28 days before the last date of submission of price bid is imposed in India under a statute or law during the currency of the Contract and the Contractor becomes legally liable thereunder to and actually pays the same for bonafide use on the Works contracted, then the Contractor shall immediately inform the Engineer-in-Charge in this regard. The Employer will reimburse the same to the Contractor on production of satisfactory proof of payment, provided that the amount thus claimed is not paid under Price variation clause 46 of General Conditions of the Contract. Changes in the advance tax rates of Income Tax payable to appropriate authorities shall not be construed as a change in the rate(s) of taxes and will not be subject to adjustment.

47.3 The Contractor's staff and labor will be liable to pay personal income taxes in respect of such of their salaries and wages as are chargeable under the laws and regulations for the time being in force, and the Contractor shall perform such duties in regard to such deductions thereof as may be imposed on him by such laws and regulations.

CLAUSE 48: PAYMENT OF FINAL BILL:

The final bill shall be submitted by the Contractor within one month of the date fixed for completion of the Work or of the date the Certificate of Completion furnished by the Engineer-in-Charge. No further claim in this regard unless as specified herein under shall be entertained. Payment shall be made within 6 months, of the submission of Final bill. If the payment not made within 6 months the interest @ 8% shall be payable on undisputed amount of bill. If there shall be any dispute about any item or items of the work then the undisputed item or items only shall be paid within the said period of six months. The Contractor shall submit a list of the disputed items within thirty days from the disallowance thereof and if he fails to do so,

his claim shall be deemed to have been fully waived and absolutely extinguished. Provided further the Employer shall not be liable to the Contractor for any matter or thing arising out of or in connection with the Contract or execution of the Works, unless the Contractor shall have included a claim in respect thereof in his Final Bill. No interest will be paid on disputed amount till the same is resolved and accepted by the Engineer-in-Charge, except that is awarded by Dispute Resolution Mechanism Authority and subjected to its acceptance by the employer. After such acceptance thereof by the Engineer-in-Charge, payment of such disputed items shall be released within 30 days thereafter in accordance with clause 45.7 or otherwise in accordance with the dispute resolution mechanism award accepted for implementation by the Engineer in Charge.

CLAUSE 49: OVER PAYMENT AND UNDER PAYMENT:

49.1 Whenever any claim whatsoever for the payment of a sum of money to the Employer arises out of or under this Contract against the Contractor, the same may be deducted by the Employer from any sum then due or which at any time thereafter may become due to the Contractor under this Contract and failing that under any other contract with the Employer or from any other sum whatsoever due to the Contractor from the Employer or from his security deposit, or he shall pay the claim on demand.

49.2 The Employer reserve the right to carry out post- payment audit and technical examination of the final bill including all supporting vouchers, abstracts, etc. The Employer further reserves the right to enforce recovery of any overpayment when detected, notwithstanding the fact that the amount of the final bill may be included by one of the parties as an item of dispute before an arbitrator appointed under clause 55 of this Contract and notwithstanding the fact that the amount of the final bill figures in the arbitration award.

49.3 If as a result of such audit and technical examination any overpayment is discovered in respect of any work done by the Contractor or alleged to have been done by him under the Contract, it shall be recovered by the Employer from the Contractor by any or all of the methods prescribed above, and if any under- payment is discovered, the amount shall be duly paid to the Contractor by the Employer .

49.4 Provided that the aforesaid right of the Employer to adjust overpayments against amounts due to the Contractor under any other contract with the Employer shall not extend beyond the period of two years from the date of payment of the final bill or in case the final bill is a MINUS bill, from the date the amount

payable by the Contractor under the MINUS final bill is communicated to the Contractor.

49.5 Any sum of money due and payable to the Contractor (including the security deposit (i.e. Performance Security & Retention Money) returnable to him) under the Contract may be withheld or retained by way of lien by the Engineer-in-Charge or Employer against any claim of the Employer or such other person or persons in respect of payment of a sum of money arising out of or under any other contract made by the Contractor with the Engineer-in-Charge or Employer or with such other person or persons.

The sum of money so withheld or retained under this clause by the Engineer-in-Charge or Employer will be kept withheld or retained as such by the Engineer-in- Charge or Employer or till his claim arising out of in the same Contract or any other contract is either mutually settled or determined by the arbitrator under Clause 55 hereof, or by the competent court .

CLAUSE 50: TRAINING OF APPRENTICES:

The Contractor shall, during the currency of the Contract, engage and also ensure engagement by his sub- Contractor and other employed by the Contractor in connection with the Works, such number of apprentices and in such categories for such periods as may be required under the Apprenticeship Act 1961 and he shall be responsible for all obligations of the Employer under the aforesaid Act, including the liability to make payment to Apprentices as required under the Act.

CLAUSE 51: CONTRACT MATTERS TO BE TREATED AS CONFIDENTIAL:

51.1 All documents, correspondence, decisions and orders concerning the Contract shall be considered as confidential and/or restricted in nature by the Contractor and he shall not divulge or allow access to them by any unauthorised person.

51.2 The Contractor shall take necessary steps to ensure that all persons employed on any work in connection with this Contract have noted that the Indian Official Secret Act, 1923 (XIX of 1923) applies to them and shall continue so to apply even after the execution of such Works under the Contract.

CLAUSE 52: LAWS GOVERNING THE CONTRACT:

Unless otherwise hereinafter provided, this Contract shall be construed, interpreted and governed by laws of India. The laws applicable to the Contract shall be the laws in force in India. **Respective Courts of Rampur Bushahr Distt. Shimla (HP) shall have exclusive Jurisdiction for adjudication upon the dispute arising out of the contract between the parties**

CLAUSE 53: PROCEDURE FOR CLAIMS

53.1 Except as otherwise provided in any other provision of the Contract, if the Contractor intends to claim any additional payment pursuant to any Clause of these Conditions or otherwise, he shall give notice of his intention to the Engineer, within 28 days after the event giving rise to the claim has first arisen.

53.2 Upon the happening of the event referred to in Sub-Clause 53.1, the Contractor shall keep such contemporary records as may reasonably be necessary to support any claim he may subsequently wish to make. Without necessarily admitting the Employer's liability, the Engineer-in-Charge shall, on receipt of a notice under Sub-Clause 53.1, inspect such contemporary records and may instruct the Contractor to keep any further contemporary records as are reasonable and may be material to the claim of which notice has been given. The Contractor shall permit the Engineer-in-Charge to inspect all records kept pursuant to this Sub-Clause and shall supply him with copies thereof as and when the Engineer so instructs.

53.3 Within 28 days, or such other reasonable time as may be agreed by the Engineer-in-Charge, of giving notice under Sub-Clause 53.1, the Contractor shall send to the Engineer-in-Charge an account giving detailed particulars of the amount claimed and the grounds upon which the claim is based. Where the event giving rise to the claim has a continuing effect, such account shall be considered to be an interim account and the Contractor shall, at such intervals as the Engineer-in-Charge may reasonably require, send further interim accounts giving the accumulated amount of the claim and any further grounds upon which it is based. In cases where interim accounts are sent to the Engineer-in-Charge, the Contractor shall send a final 'account within 28 days of the end of the effects resulting from the event. The Contractor shall, if required by the Engineer-in-Charge so to do, copy to the Employer all accounts sent to the Engineer-in-Charge pursuant to this Sub-Clause.

53.4 The Contractor shall be entitled to have included in any interim payment certified by the Engineer-in-Charge pursuant to Clause 45 such amount in respect of any claim as the Engineer-in-Charge, after due approval of the Employer, may consider due to the Contractor provided that the Contractor has supplied sufficient particulars to enable the Engineer-in-Charge to determine the amount due. If such particulars are insufficient to substantiate the whole of the claim, the Contractor shall be entitled to payment in respect of such part of the claim as such particulars may substantiate to the satisfaction of the Engineer-in-Charge. The Engineer-in-Charge shall notify the Contractor of any determination made under this Sub-Clause.

CLAUSE 54: SUM PAYABLE BY WAY OF COMPENSATION TO BE CONSIDERED AS REASONABLE WITHOUT REFERENCE TO ACTUAL LOSS:

All sums payable by way of compensation to the Employer under any of these conditions shall be considered as reasonable compensation without reference to the actual loss or damage sustained and whether or not damage shall have been sustained.

CLAUSE 55: ARBITRATION

55.1 Except as otherwise provided in clause-53.1 above, all questions, dispute or difference in relation to or in connection with the Contract shall be referred for arbitration in the manner provided as under:

a. Either of the parties may give to the other a notice in writing of the existence of such question, dispute or difference,
b. All dispute or difference in respect of which the decision has not been final and conclusive arising between the Contractor and SJVN in relation to or in connection with the Contract, shall be referred to Arbitration in the manner provided as hereunder:

i) On receipt of such notice, the Employer shall send to the Contractor a panel of three persons and thereafter the Contractor within fifteen (15) days of receipt of such panel, communicate to the Employer the name of one of the persons from such panel and such a person shall then be appointed as Sole Arbitrator by the **Engineer-in-Charge** or the Employer.

ii) Provided that if the Contractor fails to communicate the selection of a name out of the panel so forwarded to him by the Employer then after the expiry of the aforesaid stipulated period, the **Engineer-in Charge** shall without delay select one person from the aforesaid panel and appoint him as the Sole Arbitrator.

iii) The Arbitrator to whom the matter is originally referred being unable to act for any reason, then the Employer shall appoint another person to act as Sole Arbitrator in the same manner as provided in clause (ii) herein above. Such person shall be entitled to proceed with the reference from the stage at which it was left by the predecessor.

iv) The award of the Arbitrator shall be final and binding on both parties to the Contract. The Arbitrator's fees, as well as the cost of Arbitration proceedings shall be borne equally by either party.

v) Irrespective of the amount of claim, the Arbitrator shall give reasons for the award.

vi) Arbitration and Conciliation Act 1996 or any statutory amendment or re-enactment thereof and the rules made there under and for time being in force shall apply to the arbitration proceedings under this clause.

vii) The venue of the arbitration proceedings shall be in Shimla.

viii) The Language of arbitration proceedings and of all documents and communications between the parties shall be English.

ix) Notwithstanding any reference to the Arbitration herein,

a) The parties shall continue to perform their respective obligations under the Contract unless they otherwise agree to the contrary.

b) The Employer shall pay the Contractor any monies due to the Contractor.

x) Notwithstanding any reference to the arbitration herein, the parties shall continue to perform their respective obligations under the contract

55.2 The cost of Arbitration proceedings shall be borne equally by either party.

55.3 **In the event of any dispute or difference relating to the interpretation and application of the of the provision of commercial contact (s) between Central Public sector Enterprise (s)/Port Trusts inter se and also between CPSEs and Governmental Departments/Organizations *(other than those related to taxation matters)*, such dispute or difference shall be taken up either party for resolution through Administrative Mechanism for Resolution of CPSEs Disputes (AMRCD) having two level (Tier) structures in terms of DPE** Office Memorandum No. ***4(1)/2013-DPE (GM)/FTS-1835 dated 22.05.18 and DPE OM No.DPE-GM-05/0003/2019-FTS-10937 dated 20/02/2020.***

Unless otherwise agreed by both Parties: The following structure and procedure shall be followed by the concerned disputing parties:

Structure: (i) At the first Level (Tier), such commercial disputes shall be referred to a Committee comprising of Secretaries of the Administrative Ministries/Departments to which the disputing CPSEs/Parties belong and Secretary – D/o Legal Affairs. The Financial Advisors (FAs) of the two concerned Administrative Ministries/Departments will represent the issue related to the dispute in question before the above Committee. In case the two disputing parties belong to the same Ministry/Department, the above said Committee will comprise Secretary of the Administrative Ministry/Department concerned, Secretary – D/o Legal Affairs and Secretary-Department of Public Enterprise. In such a case, the matter may be represented before the Committee by the FA and one Joint Secretary of that Ministry/Department.

Further, in case of a dispute between CPSE and State Government Department/Organization, the above said committee will comprise the Secretary of the Ministry/Department of the Union to which the CPSE belongs and Secretary-D/o Legal Affairs and a senior office nominated by the Chief Secretary of the State concerned. In such a case, the matter will be represented before the Committee by the FA of the concerned administrative Ministry/Department and the concerned Principal Secretary of the State Government Department/Organization.

(i) In case the dispute remains unresolved even after consideration by the above Committee, the same will be referred to the Second Level (Tier) to the Cabinet Secretary, whose decision will be final and binding on all concerned.

Procedure: (i) At the First Level (Tier), the claiming party (Claimant) will approach the FA of it's administrative Ministry/Department for representing t he dispute before the Secretary of it's administrative Ministry/Department. The Secretary of administrative Ministry/Department of claiming party will intimate the same to the secretary of administrative Ministry/Department of responding party (Respondent) and Secretary- D/o Legal Affairs and thereafter meetings will take place in the administrative Ministry/Department of the claiming party to examine the facts and resolve the dispute on merit. The FAs of the concerned administrative Ministry/Departments will represent the issues related to the dispute in question before the above Committee. After arriving at a decision by the committee, the secretary of the administrative Ministry/Department of the claiming party will write down the decision and it will be signed jointly by both the Secretaries and Secretary – D/o Legal Affairs. A copy of the decision will be communicated by the Secretary of the administrative Ministry/Department of the claiming party to each party to the dispute for implementation.

In case where one party (1st Party) to the dispute is a Department/Organization of a State Government, the procedure for admitting the dispute will be same as above, however, all meetings in connection with resolution of the dispute will be held in the administrative Ministry/Department (Union) of other party (2nd Party) irrespective of the position of the 1st Party whether as a Claimant or Respondent. The presentation of the issues before the above Committee in this case will be done by the FA of the concerned Administrative Ministry/Department and concerned Principal Secretary of the State Government Department/Organization.

(ii) The Committee of Secretaries at first Level (Tier) shall finalise its decision within 03 months after having received the reference/notice in writing regarding the dispute from the concerned aggrieved party.

Appeal: Any party aggrieved with the decision of the Committee at First Level (Tier) may prefer an appeal before the cabinet Secretary at Second Level (Tier) within 15 days from the date of receipt of decision of the Committee at First Level, through it's administrative Ministry/Department, whose decision will be final and binding on all concerned.

CLAUSE 56: BREAKDOWN OF LUMP SUM ITEMS

For the purposes of statements submitted in accordance with Sub-Clause 45, the Contractor shall submit to the Engineer-in-Charge, a breakdown for each of the lump sum items contained in the Tender. Such breakdowns shall be subject to the approval of the Engineer-in-Charge.

CLAUSE 57: DEFECTS LIABILITY PERIOD & UNFULFILLED OBLIGATIONS

The Contract shall not be considered as completed until a Defects Liability Certificate shall have been signed by the Engineer-in-Charge and delivered to the Contractor, stating the date on which the Contractor shall have completed his obligations to execute and complete the Works and remedy any defects therein to the Engineer-in-Charge's satisfaction. The Defects Liability Certificate shall be given by the Engineer-in-Charge within 28 days after the expiration of the Defects Liability Period

Notwithstanding the issue of the Defects Liability Certificate the Contractor and the Employer shall remain liable for the fulfillment of any obligation incurred under the provisions of the Contract prior to the issue of the Defects Liability Certificate which remains unperformed at the time such Defects Liability Certificate is issued and, for the purposes of determining the nature and extent of any such obligation, the Contract shall be deemed to remain in force between the parties to the Contract.

CLAUSE 58: ECOLOGICAL BALANCE

The Contractor shall be required to ensure that there shall be no indiscriminate felling of trees by him or his labourers or their family members and he will be solely responsible for their acts in this regard. The Contractor shall try to maintain ecological balance by preventing deforestation, water pollution and defacing of natural landscape in the vicinity of work areas. The Contractor shall so conduct his construction operations as to prevent an unnecessary destruction of, scarring or defacing the natural surroundings in the vicinity of the work area.

In order to maintain the ecological balance, the Contractor shall specifically observe the following instructions:

a) Where unnecessary destruction, scarring, damage or defacing may occur as a result of the Contractor's operation, the same shall be repaired, replanted or otherwise corrected at the Contractor's expense. The Contractor will prevent scattering of rocks and other debris outside the work areas. All work areas shall be smoothed and graded in a manner to conform to the natural appearance of the landscape as directed by the Engineer-in-Charge.

b) All trees and shrubs, which are not specifically required to be cleared or removed for construction purposes, shall be preserved and shall be protected from any damage that may be caused by the Contractor's construction operation and equipment. The removal of trees or shrubs will be permitted only after prior approval by the Engineer-in-charge. Special care shall be exercised where trees or shrubs are exposed to injuries by construction equipment, blasting, and excavating, dumping, chemical damage or other operation and the Contractor shall adequately protect such trees by use of protective barriers or other methods approved by the Engineer-in-Charge. Trees shall not be used for anchorage.

c) The Contractor's construction activities shall be performed by methods that will prevent entrance or accidental spillage of solid matter contaminants, debris and other objectionable pollutants and wastage into river. Pollutants and wastes shall be disposed of in a manner and at sites approved by the Engineer in-Charge. The Contractor shall fully comply with Water (Prevention and Control of Pollution) Act, 1974 section -33(A).

d) In the Conduct of construction activities and operation of equipment, the Contractor shall utilise such practicable methods and devices as are reasonably available to control, prevent and otherwise minimise air pollution. The Contractor shall fully comply with Air (Prevention and Control of Pollution) Act, 1981 section -31(A).

Burning of materials resulting from clearing of tree, bush, combustible construction materials and rubbish may be permitted only when atmospheric conditions for burning are considered favourable.

Separate payment will not be admissible to the Contractor for complying with the provisions of this clause and all costs shall be deemed to have been included in the items mentioned in the Bill of Quantities. If any provision(s) is not complied with, within a reasonable time even after issue of a notice in this respect, the necessary operations would be carried out by the Engineer-in-charge at the cost of the Contractor.

CLAUSE 59: GENERAL

59.1 Save and except as expressly provided elsewhere in this Contract all costs, expenses, charges and liabilities for the completion of the Works in accordance with the Contract and/or for the due and faithful performance and/or the fulfillment of all of the Contractor's obligations under the Contract including furnishing of bank guarantees to the Employer pursuant to the Contract shall be to the account of and be borne by the Contractor and shall be deemed to be included in the unit rates provided for in the Bill of Quantities and the Employer shall not be liable in any manner whatsoever therefore.

59.2 Whenever any claim whatsoever for the payment of a sum of money to the Employer arises out of or under this contract against the Contractor, the same may be deducted by the Employer from any sum then due or which at any time thereafter may become due to the Contractor under this Contract and failing, that under any other contract between the Employer and the Contractor or from any other sum whatsoever due to the Contractor from the Employer or from his Security Deposit or he shall pay the claim on demand.

CLAUSE 60: CONTRACTOR'S NEAR RELATIVES EMPLOYED IN SJVN

The Contractor shall not be permitted to tender for works if any of his near relative who is employed as Accountant or Officer in any capacity between the grades of Executive Director and Assistant Engineer (both inclusive) and responsible for award and execution of contract in the SJVN Ltd. He shall also intimate the names of the persons who are working with him in any capacity or are subsequently employed by him and who are near relatives of any officer of SJVN Ltd.

Note: By the terms relatives is meant wife, husband, parents children and grand children, brothers and sisters, uncles and cousins and their corresponding in laws**.**

***CLAUSE* 61: RETIRED GOVT SERVANTS TAKING UP CONTRACT**

No Engineer of gazetted rank or other gazetted Officer/Executives employed in Engineering or Administrative duties in a Engineering Department of State Government/SJVNL or the Government of India is allowed to work as a Contractor for a period of two years of his retirement from Government service without the permission of State Government or Government of India. The contract is liable to be cancelled if either of Contractor or any of his employee is found at any time to be such a person who had not obtained the permission of State Government or Government of India as aforesaid, before submission of the tender or engagement in the

Contractor's service as the case may be.

SECTION - V

- **FORM OF BANK GUARANTEE FOR Bid SECURITY**
- **FORM OF BANK GUARANTEE FOR PERFORMANCE SECURITY DEPOSIT**
- **FORM OF BANK GUARANTEE FOR THE CONVERSION OF CASH AMOUNT OF SECURITY DEPOSIT OR RETENTION MONEY**
- **PROFORMA FOR AGREEMENT**

1. FORM OF BANK GUARANTEE FOR EARNEST MONEY DEPOSIT

(To be executed on Non-Judicial Stamp Paper of Appropriate value)

Bid Security Form

Bank Guarantee

Date:_____

(Name of Contract)

To: (Name and address of Employer)

WHEREAS (name of Bidder) (hereinafter called "the Bidder") has submitted its Bid dated (date of bid) for the performance of the above-named Contract (hereinafter called "the Bid")

KNOW ALL PERSONS by these present that WE (name of Bank) of (address of bank) (hereinafter called "the Bank"), are bound unto (name of Employer) (hereinafter called "the Employer") for the sum of: (amount), for which payment well and truly to be made to the said Employer, the Bank binds itself, its successors and assigns by these presents.

THE CONDITIONS of this obligation are as follows:

1. If the Bidder withdraws its Bid during the period of bid validity specified by the Bidder in the Letter of Tender, or adopts corrupt or collusive or coercive or fraudulent practices or default under Integrity Pact.

2. If the Bidder, having been notified of the acceptance of its Bid by the Employer during the period of bid validity.

   a) fails or refuses to sign the Contract Agreement when required, or

   b) fails or refuses to submit the performance security in accordance with the Bid Documents.

WE undertake to pay to the Employer up to the above amount upon receipt of its first written demand, without the Employer having to substantiate its demand, provided that in its demand the Employer will mention that the amount claimed by it is due, owing to the occurrence of one or both of the two above-named CONDITIONS, and specifying the occurred condition or conditions.

(**)
This guarantee will remain in force up to and including (date 90 days after the period of bid validity), and any demand in respect thereof must reach the Bank not later than the above date.

For and on behalf of the Bank

_____

in the capacity of

_____

Common Seal of the Bank

Note: 1. (**) Employer may also present any of his demands at the counters of the .....*(Name and address of the branch of the Bank in India)*.....for further relay to us.

(To be inserted in case of a foreign currency bank guarantee issued by an overseas bank outside India)

INSTRUCTIONS FOR EXECUTION OF BANK GUARANTEE FOR BID SECURITY

1. Bank Guarantee for Earnest Money Deposit should be executed on non-judicial Stamp papers of requisite value in accordance with the stamp Act if applicable to that particular state of Indian Union country of executing Bank, where executed. In case the same is issued by a first class International bank, the law prevalent in the country of execution shall prevail for the purpose of Stamp Duty on the Bank Guarantee. However, in such a case, the Bank Guarantee for Earnest Money Deposit shall be got confirmed by the Bidder through any Indian Scheduled/Nationalized Bank.

2. The executing officers of the Bank Guarantee for Earnest Money/Bid Security shall clearly indicate in (block letters) his name, designation, Power of Attorney No. / Signing Power No. as well as telephone/ fax numbers with full correspondence address of the issuing Guarantee etc.

3. Each page of the Bank guarantee for Earnest Money Deposit shall be duly signed/initialed by the executing officers and the last page shall be signed in full, indicating the particulars as aforesaid (sub-para 2) under the seal of the Bank.

4. Stamp paper shall be purchased in the name of Bank issuing the Bank Guarantee, after the date 'Notice Inviting Tender', not more than six (6) months prior to execution/ issuance of the Bank Guarantee. The name of the purchaser should appear at the back side of stamp paper in the Vendors Stamp. The issuing Bank shall be requested independently for verification/confirmation of the Bank Guarantee issued, non confirmation of which may lead to rejection of 'Bid Security'.

5. Irrevocable, valid and fully enforceable Bank Guarantee in favor of the employer (Name of Employer) issued by any scheduled bank approved by the Reserve bank of India which is acceptable to the Employer. The Bank Guarantee issued by a Foreign Bank shall be routed through the corresponding branch of such scheduled foreign banks in India or any scheduled Bank, acceptable to the employer.

6. Bank Guarantee for Bid security in original shall be submitted alongwith the Bid. However, the issuing Bank shall submit an unstamped duplicate copy of Bank Guarantee directly by registered post (A.D.) to the Employer (authority inviting tenders) with a forwarding letter.

2. FORM OF BANK GUARANTEE FOR PERFORMANCE SECURITY DEPOSIT

(on Bank's letter head with adhesive stamp)

To

---

1. In consideration of the SJVN Ltd, Corporate office Complex, Shanan, Shimla, Pin-171006 (HP). (hereinafter referred to as the 'Employer' which expression shall unless repugnant to the context or meaning thereof, called the 'Corporation' which expression shall unless repugnant to the subject or context include its administrators, successors and assigns) having agreed under the terms and conditions of Contract No._____dated_____ made between *_____ and the Corporation in connection with_____(hereinafter called "the said contract") to accept a Deed of Guarantee as herein provided for ₹_____from a Nationalised Bank/Scheduled Bank in lieu of the security deposit to be made by the Contractor or in lieu of the deduction to be made from the Contractor's bill, for the due fulfillment by the said Contractor of the terms and conditions contained in the said contract. We, the_____ Bank (hereinafter referred to as "the said Bank") having our registered office at_____do hereby undertake and agree to indemnify and keep indemnified the Corporation from time to time to the extent of ₹_____(Rupees_____only) against any loss or damage, costs, charges and expenses caused to or suffered by or that may be caused to or suffered by the Corporation by reason of any breach or breaches by the said Contractor of any of the terms and conditions contained in the said Contract and to unconditionally pay the amount claimed by the Corporation on demand and without demur to the extent aforesaid.

2. We_____Bank, further agree that the Corporation shall be made the sole judge of and as to whether the said Contractor has committed any breach or breaches of any of the terms and conditions of the said Contract and the extent of loss, damage, costs, charges and expenses caused to or suffered by or that may be caused to or suffered by the Corporation on account thereof and the decision of the Corporation that the said Contractor has committed such breach or breaches and as to the amount or amounts of loss, damage, costs, charges and expenses caused to or suffered by or that may be caused to or suffered by the Corporation from time to time shall be final and binding on us.

3. We, the said Bank, further agree that the Guarantee herein contained shall remain in full force and effect during the period

that would be taken for the performance of the said Contract and till all the dues of the Corporation under the said contract or by virtue of any of the terms and conditions governing the said Contract have been fully paid and its claims satisfied or discharged and till----------certified that the terms and conditions of the said contract have been fully and properly carried out by the said Contractor and accordingly discharges this Guarantee subject, however, that the Corporation shall have no claim under this Guarantee after---------years, from the date of expiry of the Defects Liability Period as provided in the said contract or from the date of cancellation of the said Contract, as the case may be, unless a notice of the claim under this Guarantee has been served on the said Bank before the expiry of the said period of ---------- years in which case the same shall be enforceable against the said Bank notwithstanding the fact, that the same is enforced after the expiry of the said period of ----------years.

4. The Corporation shall have the fullest liberty without effecting in any way the liability of the said Bank under this Guarantee or Indemnity, from time to time, to vary any of the terms and conditions of the said Contract or to extend time of performance by the said Contractor or to postpone for any time and from time to time any of the powers exercisable by it against the said Contractor and either to enforce or forebear from enforcing any of the terms and conditions governing the said contract or securities available to Corporation and the said Bank shall not be released from its liability under these presents by any exercise by the Corporation of the liberty with reference to the matters aforesaid or by reasons of time being given to the said Contractor or any other forbearance, act or omission on the part of the Corporation or any indulgence by the Corporation to the said Contractor or of any other matter or thing whatsoever which under the law relating to sureties would but for this provision have the effect of so releasing the said Bank from its such liability.

5. It shall not be necessary for the Corporation to proceed against the said Contractor before proceeding against the said Bank and the Guarantee herein contained shall be enforceable against the said Bank, notwithstanding any security which the Corporation may have obtained or obtain from the Contractor shall, at the time when proceedings are taken against the said Bank hereunder, be outstanding or unrealised.

6. We, the said Bank, lastly undertake not to revoke this Guarantee during its currency except with the previous consent of the Corporation in writing and agree that any change in the constitution of the said Contractor or the said Bank shall not discharge our liability hereunder. If any further extension of this Guarantee is required the same shall be extended to such required periods on receiving instruction from M/s._____ on whose behalf this guarantee is issued.

In the presence of: For and on behalf of the Bank
Witness----------
---------- Bank's common seal.

The above Guarantee is accepted by Corporation.
For and on behalf of Corporation
Signature----------
Name and Designation----------
Date----------

3. FORM OF BANK GUARANTEE FOR THE CONVERSION OF CASH AMOUNT OF SECURITY DEPOSIT OR RETENTION MONEY

(On Bank's letter head with adhesive stamp)

To

---

1. We, the----------Bank (hereinafter referred to as "the said Bank") and having our registered office at ----------do hereby undertake and agree to indemnify and keep indemnified the SJVN Limited; represented by----------(hereinafter referred to as "the said Corporation" which expression shall, unless repugnant to the subject or context, include its administrators, successors and assigns), to the extent of ₹---------- (Rupees ----------)on behalf of *----------in lieu of an equal cash amount of security deposit deposited by the said Contractor and/or deducted by the said corporation from the bills of the said Contractor and which the said Corporation has agreed to convert against a bank guarantee as hereunder, under the provisions of Contract No.---- ---------dt.----------which the said Contractor has entered into with the said Corporation in connection with the construction of- ----------at a total cost of ₹----------(Rupees----------) (hereinafter called the `said contract').

2. We, the said Bank also do hereby agree to pay unequivocally and unconditionally within 48 hours on demand, in writing, from the said Corporation, of any amount upto and not exceeding ₹_____(Rupees _____) to the said Corporation for any purpose or cause or on any account whatsoever under the provisions of the said contract in which respect the decision of the said Corporation shall be final and binding on us.

3. Provided that it shall not be necessary for the said Corporation to proceed against the said Contractor before proceeding against us and the guarantee herein contained shall be enforceable against us, notwithstanding any security which the Corporation may have obtained or obtain from the said Contractor shall, at the time when proceedings are taken against us as hereunder, be outstanding or unrealised.

4. We, the said Bank, further agree that this guarantee shall be valid and binding on us upto and including----------and shall not be terminable by notice or any change in the constitution of the said Bank or the said Contractor or by any other reasons whatsoever and our liability hereunder shall not be impaired or discharged by any extension of time or variations

made, given conceded, or agreed with or without our knowledge or consent, by or between the parties to the said contract.

5. We also undertake not to revoke this guarantee during its currency except with the previous consent, in writing, of the said Corporation.

6. Our liability under this guarantee is restricted to ₹---- ------- (Rupees----------). Our guarantee shall remain in force until---------unless a suit or action to enforce a claim under the guarantee is filed against us within six months from that date, all your rights under this guarantee shall be forfeited and we shall be relieved and discharged from all liabilities thereunder:

In the presence of Witness For and on behalf of the Bank
---------- Bank's common seal

Dated this----------day of ----------

The above Guarantee is accepted by the Corporation For and on behalf of the Corporation

Signature----------
Name and designation----------
Name of Project/Unit----------
Date----------

4. PROFORMA FOR AGREEMENT

[Refer Clause-28.0 of Section-II (ITB)]

This agreement made this _____day of_____ Between_____ (name and address of Employer) (hereinafter called "SJVN") and _____ _____ (name and address of Contractor) (hereinafter called "the Contractor" of the other party).

Whereas the SJVN is desirous that the Contractor executes _____ _____ (name and identification number of Contract) (hereinafter called 'the Works') and the SJVN has accepted the Bid by the Contractor for the execution and completion of such Works and the remedying of any defects herein at a contract price of ₹_____

NOW THIS AGREEMENT WITNESSETH as follow:

1. In this Agreement, words and expression shall assume the same meanings as are respectively assigned to them in the Conditions of Contract hereinafter referred to.

2. In consideration of the payments to be made by the SJVN to the Contractor as hereinafter mentioned, the Contractor hereby covenants with the SJVN to execute and complete the Work and remedy the defects therein in conformity, in all aspects, with the provisions of the Contract.

3. The SJVN hereby covenants to pay the Contractor in consideration of the execution and completion of the Works and remedy the defects wherein the contract price or such other sum as may become payable under the provisions of the Contract at the times and in the manner prescribed by the Contract.

4. The following documents shall be deemed to form and be read and construed as part of this Agreement, Viz.:

   a) This Contract Agreement
   b) Letter of Acceptance
   c) Contractor's bid
   d) Notice Inviting E-Tender
   e) Instructions to Bidders
   f) Technical Specifications and Safety Code
   g) Bill of Quantities/Price Schedule
   h) General Conditions of the Contract
   i) Special Conditions of the Contract
   j) Tender Drawings

k) Any other document forming part of the Contract.

The aforesaid documents shall be taken as complementary and mutually explanatory of one another but in case of ambiguities or discrepancies shall take precedence in the order set out above.

In witness whereof the parties have caused this Agreement to be executed the day and year first before written.

Signed and Delivered

For and on behalf of the Contractor	For and on behalf of SJVN Ltd.
i) Name:_____ (Authorized Signatory)	Name:_____
ii)Name : _____ _____	Designation:
In the presence of:	In the presence of :
Name _____ _____	Name_____ _____
Add. _____ _____	Add. _____ _____

Note: *This Proforma is included in the Bidding Documents only for the information of the Bidders. Only the successful bidder, shall, in due course, be required to fill this Proforma.*

SECTION- VI

SPECIAL TERMS AND CONDITIONS

SECTION- VI

SPECIAL TERMS AND CONDITIONS

1 The scope of work interalia includes all labours and equipments, material, lead, lift as the provision made in estimate/bill of quantity including payment of all taxes/duties clearance from statutory bodies' construction and maintenance.

2 The item of work is given in the Bill of Quantities (Annexure-"A") along with estimated rate & amount of the Bidding Documents. The bidder shall be required to offer their rates and prices in %age (i.e up to two (02) decimal places for the whole work, which shall include material, labour, equipment. Taxes & duties etc. except GST.

The applicable GST shall be released separately on submission of GST invoice as per GST act.

3 At clause 55.1 (b) (i) & (ii) the word Engineer-in-Charge may be read as Head of Project.

4 Contractor shall execute the work in accordance with specifications and direction of Engineer-In -charge (EIC).

5 The contractor may explore all site work condition and apprise themselves about the nature of work, approach to site and site condition, before quoting their rates.

6 Any damages during the execution of work will be the responsibility of contractor. He will have to restore such damages at his own cost and nothing will be paid by SJVN on this account.

7 No materials will be supplied by the department. All the materials shall have to be arranged by the contractor.

8 **Power Supply: - The illumination to be arrange by the contractor at its own cost by putting the demand in proper format to SJVN Ltd. Authority and electricity connection will be provided at one point near work site.**

9 **The contractor shall ensure compliance to all labour laws and take care of safety of workers during execution of work.**

10 The contractor will have to arrange all the material and minimum machinery equipment in good condition before commencement of work.

11 All initial defects shall be rectified to the entire satisfaction of the Engineer-in-Charge at no extra cost to SJVN Limited.

12 Measurement shall be taken jointly by the Engineer-in-charge or his representative and by the Contractor or his authorized representative.

13 The Contractor shall, without extra charge, provide assistance with every appliances (measuring tape etc), labour and things necessary for measurement.

14 Contractor shall permit the Employer and/or persons appointed by the Employer to inspect the Site and records of the Contractor related to the performance of the Contract.

15 The rates are inclusive of all carriages i.e. Mechanical & Manual up to work site and nothing extra shall be paid for carriage of machines and all other accessories.

16 Successful Bidder shall comply to all relevant quality, safety standards and rules/ laws of Govt. of India. During working at site, some restrictions may be imposed by Engineer-in-Charge/ CISF personnel regarding safety and security etc., the contactor shall be bound to follow all such restrictions/ instruction.

17 No labour hutment shall be allowed in the premises. All labourers should leave the site after day's work. The security & watch ward of site contractor materials/ work etc. shall be at contractor's cost only.

18 The work shall be carried out in the working office area/ plant / Residential area and hence the contractor shall take all necessary safety precautions during the execution of the works and ensure that no undue disturbances caused to the working people or at the workplace.

19 The contractor will be responsible for all his employees in observing security and safety regulations and instructions as may be issued by the SJVN Office from time to time. The contractor shall employ only adult trained, efficient and responsible staff with good health and sound mind for the work.

20 The contractor shall not involve in any manner which is detrimental to the SJVN interest or associated themselves in any capacity with SJVN employees. The personnel deployed by the contractor shall be disciplined by observing all rules and regulations of SJVN.

21 The SJVN will be under no legal obligation to provide employment to any of the Staff/ Worker of the Contractor after expiry of the contract period.

24. The contractor should have to co-operate with all the contractor and organizations related to the construction of permanent works where the material or equipment is to be fixed to or embedded in the concrete structures.

25. The specification described herein under cover all labour material, equipment and services related to the concrete work to be carried by the contractor under his contract.

26. The contractor/party should disburse the payment to his labour (actual deployed at site) through online/ digital payment mode as per labour laws.

27. The approvals given by the EIC to the contractor's plan and equipment or their operation or of any construction method shall not relive the contractor of hiss full

responsibility for the proper and safe execution of concrete work or any obligation under this contract.

28. Casting of the cube and testing of the strength of concrete shall borne by the contractor.(if applicable)
29. The frequency of sampling of concrete shall be taken in accordance to IS 456:2000.(if applicable)
30. Other terms & conditions of the contract is attached as Annexure-I “Additional Special term & conditions of the contract”.
31. The bidder, at the Bidder’s own responsibility and risk, is encouraged to visit and examine the site of works and its surroundings and obtain all information that may be necessary for preparing the bid and entering into a contract for carrying out the work. The cost of visiting the site shall be at the Bidder’s own expense.
32. Contractor shall execute the work in accordance with specifications and Drawings or as per direction of Engineer-In-charge (EIC).
33. Contractor shall permit the Employer and/or persons appointed by the Employer to inspect the site and records of the Contractor related to the performance of the Contract.
34. Sample of all materials to be used on the work be submitted for approval to the Engineer-in charge before handing over the site. The same principal will hold good for all the items of work.

SECTION-VII

BILL OF QUANTITIES

(attached as Annexure-A)

Volume-II

Safety code

SECTION – VII

(Referred to under clause 19 – C of the tender)

(i) Suitable scaffolds should be provided for workman for all works that cannot safety be done from the ground or from solid construction except such short period work as can be done safety from ladders, When a ladder is used an extra Mazdoor shall be engaged for holding the ladder and if the ladder is used for carrying materials as well suitable foot holds and hand holds shall be provided on the ladder and ladder shall be given an inclination not steeper than ¼ to 1 (¼ horizontal and 1 vertical).

(ii) Scaffolding or staging more than 3.6 m above the ground or floor, swung or suspended from an overhead support or erected with stationary support shall have a guard rail properly attached bolted, braced and otherwise secured at least 90 cm high above the floor or platform of such scaffolding or staging and extending along the entire length of the outside and ends therefore with only such opening as may be necessary for the delivery of the materials. Such scaffolding or staging shall be so fastened as to prevent it from swaying from the building or structure.

(iii) Working platform, gangways should be so constructed that they should not sag unduly or un equally and if the height of the platform or the gangway or the stairway is more than 3.6 m above ground level or floor, they should be closely boarded, should have adequate with and should be suitable fastened as described in
(ii) above.

(iv) Every opening in the floor of a building or in a working platform be provided with suitable means to prevent the fail of persons or materials by providing suitable fencing or railing whose minimum height shall be three feet.

(v) Safe means of access shall be provided to all working platform and other working place every ladder shall be securely fixed. No portable single ladder shall be over 9 m in length while the width between side rails in hung ladder shall in no case be less than 20 cm for ladder upto and including 3 m in length. For longer ladder this with should be increased at last 20 mm for each additional metre of length. Uniform step spacing shall not exceed 30 cm. Adequate precautions shall be taken to prevent danger from electrical equipment . No materials on any of the sites of work shall be so stacked or placed as to cause danger or inconvenience to any person or the public. The contractor shall provide all necessary fencing and lights to project the public from accident and shall be found to bear the expenses or defence of every suit, action or other proceedings at law that may be brought by any person for injury sustained owing to

neglect of the above precautions and to pay any damages and cost which may be awarded in any such suit, action or proceedings to any such persons or which may with the consent of the contractor be paid to compromise any claim by any such person.

(vi) All Trenches, 1.2 m or more in depth, shall at all times be supplied with at least one ladder for each 30 m in length or fraction thereof. Ladder shall be extended from bottom of the trench to at least 90 cm above the surface of the ground. The site of the trenches which are 1.5 m or more in depth shall be stopped back to give suitable slope or securely held by timber bracing, so as to avoid the danger of sides to collapse.

The excavated material shall not be placed within 1.5 m of the edges of the trench or half of the depth of the trench whichever is more. Cutting shall be done from top to bottom. Under no circumstances under mining or under cutting shall be done.

(vii) Before any demolition work is commenced and also during the process of the work :

a) All roads and open areas adjacent to the work site shall either be closed or suitable protected.

b) No electrical cable or apparatus which is liable to be source of danger over a cable or apparatus used by the operator shall remain electrically charged.

(c) All practical step shall be taken to prevent danger to persons employed from risk of fire or explosion of flooding No floor, roof or other part of the building shall be so over loaded with debris or materials to render it unsafe.

(viii) All necessary personal safety equipment as considered adequate by the Engineer-In-Charge should be kept available for the use of the person employed on the site and maintained in a condition suitable for immediate use and the contractor should take adequate steps to ensure proper use of equipment by those concerned.

a) Workers employed on mixing asphaltic materials, cement and lime mortars shall be provided with protective footwear and protective goggles.

b) Those engaged in white washing and mixing or stacking of cement bags or any material which is injurious to the eyes shall be provided with protective goggles.

c) Those engaged in welding works shall be provided with welder's protective eye sightless.

d) Stone breakers shall be provided with protective goggles and protective clothing and seated as sufficiently safe intervals.

e) When workers are employed in sewers and manholes, which are in use the Contractor shall ensure that the manhole covers are opened and are ventilated at least for an hour before the works are allowed to get into the manholes and manholes so opened shall be cordoned off suitable raining and provided with warning signals or boards to prevent accident to the public.

f) The contractor shall not employ men below the age of 18 years and women on the work of painting with products containing lead in any form. Whenever men above the age of 18 are employed on the work of lead painting the following precautions should be taken.

i) No paint containing lead or lead products shall be used except in the form of paste or ready made paints.

ii) Suitable face masks should be supplied for use by the workers when paint is applied in the form of spray on a surface having lead paint dry rubbed and scrapped.

iii) Overalls shall be supplied by the contractors to the workman and adequate facilities shall be provided to enable the working painters to wash during the cessation of work.

ix) When the work is done near any place where there is risk of drowning, all necessary equipments should be provided and kept ready for use and all necessary steps taken for prompt rescue of any person in danger and adequate provision should be made for prompt first aid treatment of all injuries likely to be sustained during the course of the work.

x) Use of hoisting machines and tackle including their attachments, anchorage and supports shall conform to the following standards or conditions.

1.a) These shall be of good mechanical constriction, sound material and adequate strength and free from patent defect and shall be kept in good repair and in good working order. (b) Every rope used in hoisting or lowering materials or as a means or suspension shall be of durable quality adequate strength and free from patent defects.

2. Every crane or hoisting appliance operator shall be properly qualified and no person under the age of 21 years should be incharge of any hoisting machine including any scaffold or which given single to operator.

3. In case of every hoisting machine and of every crane ring hook, shackle survival and pulley block used in hoisting or as means suspension the safe working load shall be as curtained by adequate means. Every hoisting machine and all gear referred to above shall be plainly; marked with the safe working load in case of hoisting machine having variable safe working load each safe working load of the conditions under which it is applicable shall be clearly indicated. No part of any machine or any gear referred to above in this paragraph shall be loaded beyond the safe working load except for the purpose of testing.

4. In case of departmental machines, the safe working load shall be notified by the Electrical Engineer-In-Charge. As regards contractors machine the contractors shall notify the safe working load of the machine to the Engineer-In-Charge whenever he brings any machinery to site of work and get it verified by the Electrical Engineer concerned.

(xi) Motors Gearing, Transmission, Electric wiring and other dangerous part of hoisting appliance should be provided with efficient safeguards, hoisting appliances should be provided with such mean as will reduce to minimum the risk of any accidental descent of the load, adequate precaution should be taken to reduce to the minimum the risk of any part of suspended load becoming accidentally displaced. When worker employed is on electrical installations which are already energized insulating mates, wearing apparel, such as gloves sleeves and both as may be necessary should be provided. the workers should not wear any rings, watches and carry keys or other material which are good conductors of electricity.

(xii) All scaffold ladders and other safety devices mentioned or described herein shall be maintained in safe condition and scaffold, ladder or equipment shall be altered or removed while it is in use. Adequate washing facilities should be provided at or near places or work.

(xiii) These safety provision should be brought to the notice of all concerned by display on a notice board be at prominent place at work spot. The person responsible for compliance of the safety code shall be named therein by the contractor.

(xiv) To ensure effective enforcement of the rules and regulations relating to safety precautions, the arrangements by the contractor shall be open to inspection by the labour officer/ Engineer-In-Charge of the department or their representative.

(xv) Notwithstanding the above clauses from (i) to (xiv) there is nothing in these to exempt the contractor from the operation of any other Act/Rule in force in the Republic of India.

TECHNICAL SPECIFICATIONS
SECTION-1
GENERAL PARTICULARS AND REQUIREMENTS

1.0. General

The Conditions of contract, Schedule of Quantities and the drawings shall be read in conjunctions with this specification and matters referred to, shown or described in any of the former are not necessarily repeated in the latter.

The work under this contract shall be carried out in accordance with General Conditions of Contract, Special Conditions of contract, Specifications, Drawings, Schedule of quantities forming part of this Contract and the latest Indian Standard Specifications and Codes of Practice referred to in this Specification.

If any item of work has not been covered in the specification, such items of work shall be executed as described in the latest Indian Specifications and good engineering practice prevailing at the time and as instructed by the Engineer. The decision of the Engineer shall be final.

1.1. Discrepancy between Drawings & Specifications & Schedule of Quantities.

1.1.1 In the event of any discrepancy between this specification and the latest Indian Standard Specifications/Codes of Practice the provision in this specification shall take precedence over the other specifications.

1.1.2 In the event of any discrepancy between the specifications and the conditions of Contract the provisions in the former shall generally take precedence over the latter.

1.1.3. In case of any discrepancy between specifications, Schedule of Quantities and Contract Drawings or such other drawings as may be issued during progress of works, the matter shall be referred to the Engineer for clarification and decision. The Contractor shall execute the work in accordance with the decision of the Engineer and under no circumstances, the Contractor shall carry out the works on the basis of his own interpretation and understanding of the apparent discrepancy.

1.2 Materials

The Contractor shall produce samples of all building materials fittings of sizes/numbers as required by the Engineer before incorporation of these materials/fittings in the work for prior approval of the Engineer. The approved samples shall remain in custody of Engineer till expiry of Defect Liability Period and returned thereafter. Samples of consumables, tiles, sand, aggregate will however, not be returned. Bulk procurement of materials shall not be commenced until the samples are approved. The materials/fittings to be provided by the Contractor shall conform to or shall be superior to the samples approved.

All materials/fittings/equipments supplied and incorporated in the work shall comply with the requirements of relevant Indian Standards (latest applicable standards) and also meet approval of Engineer.

1.3. Notice of Operation

No important operation shall be commenced nor shall work outside the usual working hours be carried out without the consent in writing of the Engineer-in-Charge.

1.4. Sequence of Works

The sequence in which the works are to be carried out shall be to the approval of the Engineer-in-Charge and shall be such as to suit the detailed method of construction adopted by the Contractor. The works shall also be carried out so as to enable the other contractors to work concurrently for early completion of the works.

1.5. Setting out the Works

The Contractor shall, set out and measure up all the works in accordance with the contract documents and for this purpose he shall appoint and employ all necessary assistants.

1.6. Datum for Contract Levels

The levels, dimensions and general construction of the work; shown on the drawings are supposed to be correct and in agreement with one another, but the Contractor must verify the same before ordering any materials or commencing the works.

1.7. Perfection to Setting out Works

The Contractor shall be entirely responsible for the accurate and prefect setting out of all works, whether such setting out be executed by his own assistants or not, and notwithstanding that the Engineer or his assistants may furnish bench marks and set out or give the necessary directions for setting out the work, the Contractor must satisfy himself as to the accuracy of these and he shall at his own cost rectify and make good any and all defects which may arise from errors in the lines and levels, and no inaccuracy in the setting out and in the construction of the works shall be founded on by the Contractor as a reason for any claim against the Employer.

1.8. Instrument for Setting out and Measurement, Testing of Works

The Contractor shall also provide and maintain at his own cost and in good order as required by and for the use of Engineer for the duration of the Contract, a modern and accurate theodolite and a precision levels both of approved type and make, complete with accessories and all instruments, poles pegs stagings, moulds, templates, profiles and all other requisite for the setting out and measuring up of the works, as well as the services of an experienced chairman.

1.9. Surveys and Levels to be agreed

Before the works or any part thereof have commenced the Contractor's Agent and Engineer or his Representative shall together survey and take levels of the site of the works and agree a particulars on which the survey is to be made, and on which the measurements of the works are to be verified. .

1.10. Responsibility for Carrying Out Works

The responsibility for carrying out the works and the methods to be adopted under the contract shall rest solely with the contractor subject always to the approvals by the Engineer of the Contractor's proposals. Such approvals shall not, however, relieve the Contractor in any of his responsibility for the proper execution of works in accordance with the Contract.

1.11. Constructions Equipment, Works, Building Materials etc.

The Contractor's attention is specially directed to the fact that the requirements of the specification are general and applicable to all the works.

In addition, the following general requirements given in sub paras shall also be held to apply to every part of the works where applicable.

(i) Use of Plant, Materials etc. for safe construction

All the labour, constructional plant, machinery, tools, instruments, tackle and equipment, temporary offices, workman's sanitary and welfare arrangements and other buildings, temporary structures, works services and operations, materials, stores and things of whatever description necessary to construct and maintain the whole of the works, temporary or permanent, or to fulfil the requirements specified in the Contract shall be provided and used by the Contractor and the constructional plant, equipment, materials, temporary buildings works services etc., shall be of a type capacity, power of quantities, strength, design and construction and erected in such position of used or executed at such times and in such manner as are specified in the Contract and as are most efficient and suitable for the proper and safe execution of the work to be under taken under this Contract.

(ii) Adoption of Safety Measures for Plant & Materials

The Contractor shall be solely responsible for the provision, sufficiency, stability, safety, protection, construction, demolition, transport, maintenance and insurance against all risks of all the aforesaid constructional plant, tools equipment, temporary buildings, structures, works, service and operations, materials, stores and things etc., and shall except otherwise stated in the contract, replace or reconstruct them or re-execute them in the event of their being lost or damaged or inaccurate and on completion of the Contract, the Contractor shall remove from the site all constructional plant, temporary offices and structures and unused material and stores and debris and shall leave the site in a tidy condition to the approval of the Engineer-in-Charge.

(iii) Service to be Provided by the Contractor

The Contractor shall make his own arrangements and except otherwise indicated shall at all points where they are required such supplies of water, fuel, light and power as he may be required for all the operations under the contract, and shall provide and use all the necessary appliances, works, services and other things, necessary to distribute the supplies to the various parts of the works.

(iv) Proper Access to Site

The Contractor will be held to have satisfied himself as to means of access to the site of the works and transport of labour, materials and plant to and form and over the works, the relative positions, lines and levels of any existing tracks, roads, sewers, drains, pipes, wires, cables, buildings and all other works and other works and other

relative contingencies, and he shall where necessary provide and maintain all requisite temporary ganway, ladders, stagings, roads and foot paths to and about the site of the works, as may be necessary for the construction of the works of transport of labour, plant and materials.

(v) Use of Services etc. by Engineer-in-Charge

All of the before mentioned works which may be constructed and in use for the works generally shall be available for the reasonable use of the Engineer-in-Charge and the Contractor shall carry out the instructions of the Engineer-in-Charge in this matter.

(vi) Furnishing information to Engineer-in-Charge

The Contractor shall furnish all information as to quality, weight, constituent substances, dimensions, levels strength and description of the material and works and other particulars as may be required the Engineer-in-Charge.

(vii) Arrangement for Testing Materials at Site

All testing, provision of weights appliances, materials, labour and everything necessary for the testing of concrete, sand and coarse aggregate shall be at the Contractor's own expense as shall be the cost of retesting any materials or works to replace those which have failed to pass the special requirements.

(viii) Contract to Cover Cost

The rates of sums entered by the Contractor in the documents shall be held to cover all costs of complying with any or all of the foregoing requirements of this clause unless expressly stated to the contrary in any part of the Contract.

1.12. Names of Manufacturers and Copies of Orders

Before ordering any materials of any description for the permanent works the Contractor shall submit for the approval of the Engineer-in-Charge, the names of the makers and suppliers proposed and any other detail required by the Engineer and shall afterwards send to the Engineer, copies in quadruplicate, of the orders given by the Contractor for the materials. All materials shall be suitable for local climatic conditions.

1.13. Manufacturer's Technical Data

1.13.1 Manufacturer's performance data, certified factory drawings of apparatus giving full information as to capacity, dimensions, materials and all, information pertinent to the adequacy of the submitted equipment shall be submitted for approval.Manufacturer's names, sizes catalogue numbers and/or samples of all materials shall be submitted for approval.Submittals and shop drawings should, as far as possible be complementary so that drawings and submittals can be cross checked.

1.13.2. Requirements for Equipment submitted for approval must be accompanied by relevant drawings, technical data, catalogues and samples. Where data certified drawings or other required information is not available until after orders have been placed, the Engineer-in-Charge will give provisional approved until all requested drawings and information have been supplied to the Engineer-in-Charge and approved

by him. It is Contractor's responsibility. To ensure that all necessary information is supplied to the Engineer-in-Charge in accordance with the progress of the work.

1.14. Proprietary Materials

Proprietary materials to be used in the works, and shall, when brought to site be got inspected by the Engineer-in-Charge. Proprietary materials brought to site shall be stored as per recommendation of the manufacturer and as directed by the Engineer-in-Charge.The Contractor shall, on demand, produce to the Engineer original receipts/vouchers/invoices in respect of the supplies.The Contractor shall ensure that the materials are brought to site in original sealed containers/packing bearing manufacturer's markings.

1.15. Test Certificates

All manufacturer's certificates of test proof sheets, mill sheets, etc. showing that the materials have been tested in accordance with the requirements of the appropriate Indian Standard other relevant standard specification or this specifications, are to be supplied free of charges, on request, to the Engineer-in-Charge or his Representative.

1.16. Rejection of Materials

Materials shall be tested before leaving the manufacturer's premises, where possible. Materials shall also be tested on the site and they may be rejected if found not to be suitable or not in accordance with the specifications notwithstanding the results of tests at the manufacturer's works or elsewhere or of test certificates.

1.17. Storage of Materials

All materials used in the permanent works shall be stored on racks, supports, in bins under cover etc. as appropriate to prevent deterioration or damage from any cause whatsoever to the entire satisfaction of the Engineer-in-Charge or his representatives and as exemplified in the succeeding clauses.

1.18. Records and Usage of Materials

The Contractor shall maintain a detailed record of all materials received on the Site or in his stores or storage and working areas in the vicinity of the Site and shall make such records available to the Engineer at such times as the latter may reasonably require.

1.19. Filling in Holes and Trenches

The Contractor immediately upon completion of any work under the Contract shall at his own expense fill up all holes or trenches which have been made or dug, level or remove mounds of earth that may have been made, and clear away all rubbish occasioned in the execution of the work or Temporary Works. Dug-up trenches should be properly protected by day and by night by providing red lights.

1.20. Forming Holes & Making Good

Leave or form holes in concrete including reinforced cement concrete, brick work, floors and in any other situations as required for or directed by the Engineer-in-Charge and make good, in the same mortar/mix as specified for that portion of the work. No extra payment on this account will be made to the Contractor.

1.21. Cleaning Down

The Contractor shall wash and clean all floors remove cement/like/paint drops etc. clean the joinery, glass panes etc., touch up all painter's work and carry out all other necessary items of work in connection therewith and leave the whole premises clean and tidy before handing over the building without extra cost to the Employer.

1.22. Keeping Site Clean

The Contractor shall at all time keep the site free from all surplus excavated materials, rubbish and offensive matter which shall be disposed of in a manner to be approved by the Engineer-in-Charge.

1.23. Performance of Work on approval drawings

Amended and altered drawings shall show the nature of the amendment or alteration in revision on the drawing, together with the revision number or, letter and the date of the revision.

The Engineer-in-Charge's approval of details and installation drawings, however, will not relieve the contractor of his responsibility for errors and incorrect setting out. The Engineer-in-Charge's approval is on general and not intended to serve as a check and does not relieve the Contractor from furnishing the materials and performing the works as required by the drawings and Specification and other obligations under the Contract.

1.24. Safety Precautions

The Contractor shall take all necessary safety precautions to prevent the possibility of accidents which may be caused mechanically, electrically or otherwise during the course of the works. The works shall include the provision and fixing of detachable guards of approved design to cover all moving machine parts wherever they may be located and whether they are intended to be permanent or temporary and in such manner as to comply with the appropriate statutory requirements. It shall also include such step-down transformers as to be used for portable electrical tools.

1.25. Supervision of Mechanical and Electrical Works

All electrical and mechanical works/installation of equipments shall be carried out under the supervision of competent agents, who shall be considered to be the duly accredited representative of the Contractor, empowered to take instructions from the EIC and to attendance at the premises until he whole of the works have been completed and passed by the Engineer and shall instruct and give all information regarding the plant and/or equipment to the Engineer. The works shall be carried out in best workmanlike manner by experienced persons and licensed on the trade(s). Particulars of experience alongwith relevant certificate shall be furnished to the EIC prior to commencement of work for approval.

1.26. Maintenance of Finishes

The Contractor shall cover and project the various works and portions there of from all damage due to in considered or rough treatment, dust, grit or injury in other ways. All bright parts shall be covered with transparent polyethylene sheeting and shall be cleaned and polished before being handed over wherever is required.

1.27. Painting

1.27.1. All steel work, steel tubes, tanks brackets supports, sheeting, castings, and the like not otherwise protected shall be treated on site during erection and after completion of the works.

1.27.2.Mild Steel tubing, sheeting, tanks brackets, supports and castings shall, at work, have all surfaces thoroughly cleaned down to remove all traces of rust, dirt, grease, oil, mill scale and fluxing materials used for soldering, brazing or welding. Special attention must be given to cleaning of all corners, crevices, bolts and rivet heads.

When quite dry and clean these surfaces must be painted immediately with best quality rust inhibiting metallic lead primer. The primer shall be vigorously applied, particularly to crevices, bolts and rivet heads. Edge and corners shall be primer first, allowed to dry, then the whole surface painted. Surfaces must be thoroughly examined immediately on arrival at Site and any damage to the primer suffered during transit made good by cleaning and re-painting.

1.27.3. Galvanized surfaces need not be treated before dispatch, except special cases where the coating has to be disturbed as part of the manufacturing process. (Generally, galvanizing shall be carried out after manufacture).

1.28. Co-ordination of Builder's Work

The Contractor shall co-ordinate with the requirements for holes, inserts, fittings and other similar builder's work in correlation with each trade of work. The Contractor shall ensure that such builder's work are in accordance with the specialist Sub-Contractors/Suppliers requirements. Details of holes inserts, access, fixing etc. which are not shown on Engineer-in-Charge's drawings but are required by the Contractor or by Sub-contractor shall be forwarded to the Engineer-in-Charge for his written approval at least three weeks before work proceeds.

1.29. Contract Price

The Contract price quoted by the Contractor shall be deemed to include for all above General particulars and Requirements of Specification and for due and proper execution and completion of the work.

SECTION-2

2.1. EARTH WORK

2.1.1 General

This section of the Specification shall cover Site clearance, surface excavation, rough excavation, and excavation over areas in all kinds of soil, excavation in foundation trenched or drains in all kinds of soil, excavation in trenches for pipes, cables etc. and refilling excavation in water, mud or for position planking and strutting, filling in trenches, under floors sand fillings anti-termite treatment.

2.1.2 Specifications

Generally all work as stated above be done in accordance with C.P.W.D. Specifications including amendments, unless otherwise specified hereinafter.

2.1.3 Hardcore

Hardcore shall unless otherwise directed consists of broken stone or dry brick blasts from well burnt bricks etc. and shall be free from dust, soil, rubbish, wood and other foreign matter and shall be to the approval of the Engineer-in-Charge's representative.

2.1.4 Material of Filling

All materials for filling shall be approved and obtained from an approved and obtained from an approved source and shall be free from silt, rubbish and other deleterious matter.

2.1.5 Anti-Termite Treatment

It shall be guaranteed that the building is safe from termite infestation for a period of 10 years after the expiry of defects liability period. Such a guarantee shall be directly given by the specialist agency to the Employer in a form approved by the Engineer-in-Charge. In the event of re-infestation at any time during guarantee period, the specialist agency shall undertake to the Employer to carry out such treatment as may be necessary to render the structure free form termite infestation including making and reinstating any other works that may be necessary for the treatment at no extra cost.

2.2. CONCRETE WORK

2.2.1 General

This section of the Specifications covers all concrete work and Reinforced Concrete Works as required for the purpose of construction.

2.2.2 Specifications

All concrete and Reinforced Concrete Work shall generally be carried out in accordance with C.P.W.D. Specification including amendments, unless otherwise specified hereinafter.

2.2.3 Basic Materials

General

All basic materials for concrete work shall conform to specifications as described hereinafter.

2.2.4 Broken Stone

Quarried Stone

Quarried stone shall be hard durable stone of the best quality obtainable properly graded for the purpose for which it is required and shall be to the approval of Engineer-in-Charge's representative.

2.2.5 Coarse Aggregate

General

This coarse aggregate for all concreting works shall comply in all respect with IS:383

This shall be crushed or broken from hard stone obtained from approved quarry. It shall be hard, strong, dense and durable, clean and free from soft, friable, thin, flat, elongated or laminated form dirt and any other foreign matter. However, the total amount of deleterious substances such as coal, lignite, clay lumps, soft fragments, foreign materials and other deleterious materials in the stone aggregate shall not exceed 5% of its weight.

Stacking

When stack piling, the aggregate shall not form paramids resulting in segregation of different sized materials. It shall be stacked separately according to nominal sizes of course aggregate in regular stacks of heights not exceeding 150 mm.

2.2.6 Fine Aggregate

General

Aggregate most of which passes 4.7 mm. IS sieve is known as fine aggregate. The sum of the percentage of all deleterious materials shall not exceed 5%. It shall not contain harmful organic importies in such form or quantities as to affect adversely the strength and durability of concrete on mortar. Fine aggregate when used for places where reinforcement is used shall not contain any material acidic in character which is likely to attack steel reinforcement. Fine aggregate shall be either sand or crushed stone dust.

Fine Sand

This shall be natural river sand. Its grading, as determined by the Limits of grading zone IV. When the grading falls outside the percentage limits prescribed for the silver other than 600 micron, 300 micron & 150 micron (IS) sieves by not more than 5% it shall be regarded as falling within this zone. This 5% can be split up. For example it could be one percent on each of three sieves and two percent on another or four percent an one sieve and one percent an another.

Coarse Sand

This shall be pit sand of the Badarpur or equal approved variety. It shall be clean, sharp strong angular and composed of hard silicious material. Its grading shall be within the limits of Grading Zone III (Table Below). When the grading falls outside the percentage limits prescribed for the sieves other than 600 micron, 300 micron and 150 micron (IS) sieves but not more than 5% it shall be regarded as falling with this zone.

This five percent can be split up; for example it could be one percent on each of three sieves and one percent on another.

Percentage Passing for					
Sieve Descriptions	Grading Zone-I	Grading Zone-II	Grading Zone-III	Grading Zone-IV	Grading Zone-V
10 mm	100	100	100	100	--
4.5 mm	90-100	90-100	90-100	95-100	--
2.36 mm	60-95	75-100	85-100	95-100	100
1.8 mm	30-70	55-90	75-100	90-100	100
600 Microns	15-34	35-59	35-60	80-100	85-100
300 Microns	5-20	8-30	8-30	20-65	65-95
150 Microns	0-10	0-10	0-10	0-15	0-60

Note: Fine aggregate conforming to grading zone IV shall not be used in reinforced concrete unless tests have been made to ascertain the suitability of proposed mix proportions.

2.3 CEMENT

2.3.1 Ordinary Portland Cement

Ordinary Portland Cement shall be in accordance with IS:269 “Ordinary and Low Heat Portland Cement”. Portland pozzolana Cement shall be as per IS: 1489. White Cement shall be in accordance with IS: 8042.

Delivery

The Contractor shall advise the Engineer’s Representative of receipt of each delivery and shall forward to him an invoice stating the quantity delivered.

Tests after Delivery

Each consignment of cement may after delivery on site and at the discretion of the Engineer’s Representative be subjected to the whole of the tests and analysis required by IS: 269.

Stock of Cement

In order to ensure due progress, the Contractor shall at all times maintain on the Site at least such a stock of cement as the Engineer-in-Charge’s Representative may from time to time consider necessary. No cement shall be used upon the works until it has been accepted as satisfactory by the Engineer-in-Charge’s Representative.

Returns

The Contractor shall make a monthly return to the Engineer-in-Charge's Representative on the date corresponding to the interim certificate date, showing the quantities of cement received and issued during the month and in stock at the end of the month.

Storing on the Site

All cement kept upon the site shall be stored in an approved manner and shall be properly protected from the weather during transport and until used in the works.

Stocks on site shall be used in the order of delivery.

The Contractor shall ensure that different brands of cement are kept in entirely separate stores.

Rejection of Cement

The Engineer-in-Charge's Representative may reject any cement which has deteriorated owing to inadequate protection or other causes or in any other case where the cement is not to his satisfaction. The Contractor shall remove all rejected cement from the site without delay. The cost of rejected cement shall be borne by the Contractor if it is due to inadequate protection or other causes for which contractor is responsible.

2.4. WATER

Fresh Water

Water used shall be clean reasonably free from injurious quantities of deleterious materials such as oils, acids, alkalies, salts and vegetable growth. General potable water shall be used. When water contains any sugar or an access of acids, alkalies or salts, the Engineer's Representative may refuse to permit its use.

2.5 STRUCTURAL STEEL

Mild Steel

Structural Steel shall conform to IS: 2062/IS: 226 "Structural Steel"

High Tensile Steel

High tensile steel shall conform to IS: 961 "Structural Steel (High tensile)"

Black Bolts and Nuts

Black bolts, nuts and screws shall be in accordance with IS: 1363 "Black Hexagonal Bolts (6 to 39 mm) with Nuts, and Black Hexagonal Screws (6 to 24 mm).

Precision Bolts & Nuts

Precision bolts, nuts and screws shall be in accordance with IS: 1364 "Precision and semi-precision hexagon bolts, screws, nuts and lock nuts (dia range 6 to 39 mm)".

Galvanized Mild Steel Tubes & Fittings

Galvanized mild steel tubes shall comply with the requirement of relevant IS Code for medium weight tubes.

Coach Screws and Rag bolts

Coach screws, rag bolts etc. shall comply with IS: 2609.

2.6. STEEL REINFORCEMENT

TOR Steel Reinforcement

Tor Steel Reinforcement bars for concrete shall be round bars, unless otherwise specified and shall comply with Grade I Steel for concrete reinforcement.

Binding Wire

Annealed steel binding wire shall comply with the requirements of IS:280. The gauge of the binding wire will be 18.

Stamping or Marking

The steel shall be marked or stamped with a mark for the purpose of identification as may be directed by the Engineer's Representative.

Other Materials

All materials not herein fully specified have been specified in the individual sections hereinafter.

2.7. Concrete Mixes

The cement aggregates and water shall be mixed in such proportions as to comply with the following strength and other requirements for precast concrete, normal reinforced concrete, mass concrete and dry packed concrete work.

Grade	Maximum size of aggregate	Minimum crushing strength in works at 28 days (N/mm2) on 15 mm cube
M-10	40 mm	10
M-15	20 mm	15
M-20	20 mm	20

2.7.1. Blinding Concrete

The blinding concrete (mix 1:4:8) and other mass concrete (mix 1:3:6) and (mix 1:6:12) shall be mixed in proportion by volume as shown in the drawing or as instructed by the Engineer-in-Charge's Representative with ordinary Portland Cement using well graded aggregate the maximum size of which shall, not exceed 40 mm.

The actual proportion of cement, fine aggregate, coarse aggregate and water shall be determined by preliminary test to be carried out by the contractor to obtain the mix of required strength according to IS:456.

2.8. Mortar and Grout

Mortar and Grout shall, unless otherwise specified be composed of Portland Cement and sand and shall be mixed in the proportions called for.

2.9. Mixing

All concrete shall be mixed in a pan or drum type mixer, the type and capacity of which is to be approved by the Engineer-in-Charge's Representative. The times allowed

for mixing (after all ingredients have been placed in the mixer) shall be as ordered by the Engineer-in-Charge's Representative but shall not be less than two minutes for normally reinforce work.

2.10. Transporting

In case where controlled concrete of the lowest possible water/cement ration is specified which does not permit of pumping or placing with the aid chutes, it shall be transported in bottom openings skip of type and size as may be approved by the Engineer-in-Charge's Representative.

2.11. Vibrating of Concrete

All concrete shall be vibrated unless otherwise specified or ordered and such vibrating may be required by the Engineer-in-Charge's Representative to be additional to, and not in substitution for, compaction stipulated in other Clauses. All vibrating shall be carried out to a plan approved by the Engineer-in-Charge's Representative. No workman shall be allowed to operate a vibrating tool without having received instruction and training in its use. Vibrators shall be of approved pattern and arrangement. Care must be taken to avoid segregation due to excessive vibration.

2.12. Tests and Crushing Strength

The Contractor shall be held responsible for ensuring that the crushing strength of the concrete as placed is not less than that specified for the particular work.

The cost of testing shall be borne by the Contractor. A number of samples of the concrete shall be taken by the Contractor during each pour as per IS:1199 for the purpose of testing cubes as per IS:516. Should the results found to be unsatisfactory, all the concrete represented shall be removed from the works and replaced by the Contractor at his own cost with concrete complying with the specified requirements.

2.13. Precautions during Inclement Weather

During windy weather efficient protection is to be provided to prevent the cement from being blown away during the process of apportioning and mixing. During wet weather the concrete shall be adequately protected as soon as it is in position.No concreting shall be carried out during period of continuous heavy rain unless it is completely covered during mixing, transporting and placing. Concrete in hot weather shall be carried according to the stipulation of best practices.

2.14. Commencement of Concreting

No concreting shall be commenced in any portion of the works until the preparations have been approved and permission given by the Engineer-in-Charge's Representative that the concreting in such portion of the works may commence.

2.15. Laying of Concrete

The concrete shall be deposited in its final position in a manner to preclude segregation of ingredients. In deep trenches and footings, concrete shall be placed through chutes as directed by the Engineer's Representative. In case of columns and

walls the shuttering shall be so adjusted that the vertical drop of concrete is not more than 1.5 meters at a time.

During cold weather, concreting shall not be done when the temperature falls below 4.5°C. The concrete placed shall be protected against frost by suitable covering. Concrete damaged by frost shall be removed and work shall be redone.

It is necessary that the time between mixing and placing of concrete shall not exceed 30 minutes so that the initial setting process is not interfered with.

2.16. Compaction

Concrete is to be worked up against whatever surface it adjoins. Great importance is attached to the depositing and thorough compaction of the concrete to ensure that it is homogeneous and free from interstices, and that it is in immediate contact throughout with adjoining concrete other materials ground or shutters therefore, the method of carrying out this work and the number and type of reamers, vibrators, etc. to be employed on any particular section of the work are to be to the entire satisfaction of the Engineer's Representative.

The compaction is not to be confined to the upper surface of the layer deposited, but the whole must be thoroughly well punned and/or vibrated so as to become consolidated, with the mass assuming a jelly like consistency and the water just appearing on the surface.

2.17. Construction Joints

Concreting shall be carried out continuously upto the construction joints, the position and details of which shall be as shown in drawings or as directed by the Engineer-in-Charge's Representative. Such joints shall be kept to the minimum & shall not be located in valleys. The joints at places where the shear force is the minimum and these shall be straight and at right angles to the direction of main reinforcement.

In case of columns, the joints shall be horizontal and 10 to 15 cm below the bottom of the beam running into the column head. The portion of the column between the stepping off level and the top of the slab shall be concreted with the beam.

When stopping the concrete on a vertical plane in slabs and beams and horizontal surfaces for R.C. wall, an approved stop-board shall be placed with necessary slots reinforcement bars or any other obstruction to pass the bars freely without bending. The construction joints shall be keyed by providing a triangular or trapezoidal fillet nailed on the stop-board. Inclined or feather joints shall not be permitted. Any concrete cement slurry flowing though the joints of stop-board shall be removed soon after the initial set. When concrete is stopped on a horizontal plane, the surfaces shall be roughened and cleaned after the initial set.

2.18. Filling of Joints

When the work has to be resumed, the joint shall be thoroughly cleaned with a wire brush and loose particles removed. A coat of 2.75 kg of cement per square meter shall then be applied on the roughened surface before fresh concrete is laid.

2.19. Intervals during Concreting

The time table for the deposition of concrete is to be so arranged that no face of concrete shall be left more than 20 minutes before concrete is deposited against it. Pauses for meals, changes of shifts, etc. and the distribution of the concrete among the positions where work may be proceeding simultaneously must, therefore, be carefully organized to ensure that the above mentioned interval is not exceeded.

2.20. Sloping beds not allowed

Unless otherwise specified, no peripheral slopes will be allowed in connection with deposition of concrete. Where is necessary for any reason to terminate a bed, such termination must be against timber forms, stepped as required and as directed by the Engineer-in-Charge's Representative.

2.21. Concrete not to be disturbed

Care is to be taken not to disturb the concrete by direct or indirect loading, striking of shutters or otherwise, until has hardened sufficiently.

2.22. Curing

After the concrete has begun to harden i.e. about 1 to 2 hours after its laying, it shall be protected from quick drying with moist gunny bags, sand or any other material approved by the EIC/his Representative.

After 24 hours of laying of concrete, the surfaces shall be cured by flooding with water of minimum 25mm depth, or by covering with wet absorbent material. The curing shall be done for a minimum period of 14 days.

2.23. Faulty Work

All concrete surfaces shall be reasonable smooth and true to level. Any defects which require repair when forms are removed, such as, bulges due to movement of forms, ridges at form joints, honeycombed areas, damage resulting from the stripping of forms, and bolt holes etc. shall be carried out with no extra cost. Bulges and ridges are to be removed by careful chipping or tooling and the surface shall then be rubbed with a gridding stone. Honeycombed and other defective area's must be chipped out, the edges being cut as straight as possible and perpendicular to the surface, or preferable slightly undercut to provide a key at the edge of the patch. No concrete surfaces shall be painted with cement wash. No construction or repairs to faulty work shall be done without the permission of the Engineer-in-Charge.

2.24. Form Work

Form work shall include all temporary or permanent forms of moulds required for forming the concrete which is cast-in-situ, together with all temporary construction required for their support.

Form work shall be of rigid construction true to shape and dimensions. It shall be strong enough to withstand the dead and live loads and forces causes by ramming and vibrations of concrete and other incidental loads, imposed upon it during and after casting of concrete. It shall be made sufficiently rigid by using adequate number of ties and braces. Screw jacks or hard board wedges, wherever required shall be provided to make up any settlement in the form work either before or during the placing of concrete.

Form shall be so constructed as to be removable in sections in the designed sequence without damaging the surface of concrete or disturbing other section. All form work should be easy to strip after concreting and form work must be erected into this consideration in mind. Case shall be taken to see that no piece is keyed into the concrete. Details of form work shall be properly worked out and got approved from the Engineer-in-Charge. The completed form work shall be inspected and approved by the Engineer-in-Charge before the reinforcement bars are placed in position.

2.25. Materials for Form Work

Form work shall be of steel, plywood sound and properly seasoned timbers, or any other material as approved by the Engineer-in-Charge. Timber used for form work shall be easily workable with nails without splitting, and of light weight. It shall be stiff and strong enough to avoid undue deflection when loaded; be stable and not liable to wrap when exposed to Sun and Rain or wetted during concreting. It shall not be so soft as to get damaged easily on the contact faces under normal condition of erecting forms, fixing steel and pouring concrete.

2.26. Propping and Centering

Props used for centering shall be of steel, timber posts, ballies or any other material approved by the Engineer's Representative. In no case shall ballies be of diameter less than 100 mm measured at mid length and 80 mm at thin end. Maximum permissible spacing shall be 1.2 meters centre to centre. Ballies shall rest squarely on wooden sole plates of 40 mm thickness and minimum bearing area of 0.1 square meter laid either on ground or on 40 x 40 cm brick masonry pillars in mortar of height not exceeding 40 cm. Double wedges shall further be provided between the sole plates and the wooden props so as to facilitate tightening and easing of shuttering without jarring the concrete. In case brick masonry pillars of adequate section are used instead of props, wooden sole plates shall be provided at the top of pillars and double wedges inserted between the sole plate and the bottom of shuttering.

In case of structures with two or more floors, the weight of concrete, centering and shuttering of any upper floor being cast shall be suitably supported on the floor below the topmost floor already cast. In such cases normal props as per above clause shall be provided for supporting the floor to be cast on the topmost floor already cast. Suitable supports below this floor shall be provided preferably to come below the props of the upper floor. Planks at top ends of these props shall be provided so as to give even distribution of load.

Form work and concreting of upper floor shall not be done until concrete of floor has set for atleast 14 days. In case of balconies and anti-lever beams coming one above the other, the members being cast shall be supported by props on two floors below the floor where initial supporting has been done. Ballies shall rest squarely on wooden sole plates of 40mm thickness and with minimum bearing areas of 0.1 square meter.

The details of form work stated shall be applicable for spans of 4.50 meters and height upto 3.50 meters. In case any of these limits is exceeded the form work shall be properly designed for the self weight, weight of reinforcement, weight of fresh concrete, various live loads imposed during the construction process (such as workmen and equipment). Dumping of concrete, movement of construction equipment and action of the wind may produce lateral forces which must be resisted by the form work to prevent

lateral failure for which suitable horizontal as well as diagonal bracings shall be provided. The permissible stresses in bending, buckling load of props, permissible deflection of shuttering should not be exceeded. In case the height of centering exceeds 3.50 meters, the props may be provided in multi-stages.

Before the concreting is started, the props and wedges shall be thoroughly checked to see that these are intact and take suitable action in case these are loose. While the concreting is in progress, at least one carpenter shall be readily available at site. The carpenter shall keep a constant watch on the props and take immediate remedial measures, as soon as any of this get loosened. Care shall be taken that props and wedges do not get loose for a minimum period required for the form work to be stripped as per IS: 456.

2.27. Shuttering

The shuttering shall have smooth and even surface and its joints shall not permit leakage of cement grout. Ply board shuttering material used shall be well seasoned, free from projecting nails, splits or other defects that may mark the cement surface of concrete. It shall not be so dry as to absorb water from concrete and swell and bulge, nor so green or wet as to shrink after erection.

The timber shall be accurately sawn and planed on the sides and the surface coming in contract with concrete. Wooden form work with metal sheet lining or steel plates stiffened by steel angles shall also be permitted. Where metal forms are used, all bolts and nuts shall be counter sunk and well ground to provide a smooth plain surface. The chamfers, beveled edges and molding shall be made in the form work itself. Opening for fan clamps and other fittings connected with services shall be provided in the shuttering as directed by the Engineer-in-Charge/his Representative.

As far as practicable, clamps shall be used to hold the forms together. Where use of nails is unavailable minimum number of nails shall be used and these shall be left projecting so that they can be easily withdrawn. Use of double headed nails shall be preferred.

2.28. Surface Treatment for Shuttering

The surfaces of timber shuttering that would come in contact with concrete shall be well wetted and coated with soap solution, raw linseed oil, form oil of approved manufacture or any other approved material (such as polythene/polyethylene sheets) to prevent adhesion of concrete to form work. Soap solution, for the purpose shall be prepared by dissolving yellow soap in water to get the consistency of paint. Inside surfaces of forms shall be thoroughly cleaned before application of any of the materials mentioned above. Release agents shall be applied strictly in accordance with the manufacturer’s instructions and shall not be allowed to come in contact with any reinforcement. Reuse of the shuttering shall be permitted only after the inside surface has been thoroughly cleaned in the manner described above.

Contractor shall give the Engineer’s Representative due notice before placing any concrete in the forms to permit him to inspect and accept the form work as to its strength, alignment and general fitness, but such inspection shall not relieve the

Contractor of his responsibility for safety of men, machinery, materials and for result obtained.

2.29. Camber

Suitable camber shall be provided in horizontal members of structures, specially in long spans to counteract the effects of deflection. The form work shall be so assembled as to provide for such camber. The camber for beams and slabs shall be 4 mm per meter (in 250) or as directed by the Engineer's Representative, so as to offset the subsequent deflection. For cantilevers, the camber at free end shall be 1/50th of the projected length or as directed by the Engineer-in-Charge/his Representative.

2.30. Special Provision

Wherever the concreting of narrow members is required to be carried out within shutters of considerable depth, temporary openings in the sides of the shutters shall, if so directed by the Engineer-in-Charge/his Representative by provided to facilitate the pouring and consolidation of the concrete. Small temporary openings shall be provided as necessary at the bottom of shutters of walls and deep beams to permit the expulsion of rubbish etc.

2.31. Removal of Form Work

The form work shall be so removed as not to cause any damage to concrete due to shock or vibration. In a slab and beam construction, sides of beam shall be stripped first, then the under sides of slab and lastly the underside of the beam.

Form work must be designed that these can be stripped in the order required i.e.

a) Shutters to vertical (non-bearings) faces e.g. column boxes, beam sides, wall forms.
b) Shutters forming soffits to slabs, horizontal and inclined which carry only light load e.g. slabs, roofs, floors and canopies etc.
c) Soffits shutters carry heavy load e.g. beams and girder bottoms.
d) All surfaces of R.C.C. structures shall be roughened by hacking on faces which is to receive plaster or where it is to joint with brick masonry wall after the shuttering is removed, taking care to remove the laitance completely without disturbing the concrete and shall be included in the rates.

The whole of the form work should be planned and a definite scheme of operation worked out. In no circumstances should forms be struck until the concrete reaches a strength of atleast twice the stress to which the concrete may be subjected at the time of striking but not before the period as mentioned in IS: 456 where ordinary Portland Cement is used. Where possible the form work should be left longer as it would assist curing. Forms should be eased carefully in order to prevent the load being suddenly transferred to concrete. The removal of centering and shuttering to be done to the approval of the Engineer-in-Charge.

2.32. Shuttering for Exposed Concrete Surfaces

Particular care shall be taken about the quality of workship and execution of the form work and concrete, as under no circumstances any repair work of patching up shall

be allowed. The pattern of the boards and the proposed lifts of concrete shall be as shown in the drawing which shall be incorporated, by the Contractor in his shutter design drawings for approval of the Engineer-in-Charge. The joints between boards or panels, which are not to be shown, shall be painted with patching plaster or otherwise field or course to make the surface free of all marks. After manufacture and before fixing, each form work shall be got approved by the Engineer-in-Charge/his Representative.

Construction joints shall be positioned as indicated in the drawings or as directed by the Engineer-in-Charge. To achieve this, plywood of maximum size available in the market shall be procure so that the number of joints in the plywood in a shuttering board in any lift is minimum.

2.33. Discoloration

Formation of blotches and stains due to detachment of formwork panel from the concrete when adjacent portion in the same lift is still adhering shall not be allowed to occur and for this purpose all shutters shall be struck off at the same time. Use of old and new plywood in the same level/face shall be totally avoided to get rid of discoloration.

2.34. Nailing

Nailing shall be done carefully using hammers with smooth and well-dressed heads to prevent marring of the form surfaces. Box nails shall be used when required on concrete surface and shall be placed in neat pattern.

2.35. Mould Oil

Non-staining form oil or coating or release agent shall be used for forms to prevent un-even colouring of the concrete. Care shall be taken that the mould oil is applied sparingly and evenly and is kept out of contact with the reinforcement and do not accumulate at bottom of the form work.

Form shall not be coated with any material that will interfere with subsequent wetting of surfaces to be cured or with the functioning of sealing compounds used for curing.

Thinner oil shall be used for better surface finish. Brushes shall be very clean and the
Engineer's Representative shall be at liberty to ask for application of the oil by; spraying if considered unsatisfactory otherwise.

2.36. Ties

Use of ties shall be very much restricted and as far as practicable form work shall be supported without the ties by propping against staging erected firmly for the purpose.

2.37. Measures for Providing Cover to Exposed Concrete

Care shall be taken that the porous surface on the precast concrete blocks is not visible when the shuttering is removed. Any steel bar supports used at concrete surfaces to be exposed shall be galvanized or plastic coated to prevent rusting. It is preferable that entire bar support in such locations shall be made of plastic or other non-

rusting material. Bar chairs shall be strong enough and spaced closely enough so that they are not excessively loaded.

2.38. Erection Practice

The form work at corners shall be usually tight and braced so that no movement occurs and no bleeding takes place due to slightest opening of the corner. Corners shall be sharp and straight so that leakage through the forms is prevented. The meeting surfaces of the forms shall be reduced to minimum bearing areas to improve tightness of the joints.

Boxes, moulds, rustication strips or any insert attached to the main forms shall be nailed as lightly as possible so that they may be pulled out, pulled loose form the forms during the stripping operation and should not remain in the concrete.

2.39. Stripping

The formwork shall be struck by using suitable approved methods taking care that the surface of the concrete is not damaged in any way as under no circumstances any repair of exposed concrete surface shall be allowed.

2.40. Clean up

After forms are stripped all materials to be reused shall be thoroughly cleaned. All nails shall be pulled from the plywood board and no nail shall be bent over by hammering against the face of the material if reuse of forms is planned. Holes board through sheathing for forms ties shall be plugged by driving in common corks or foamed plastics. Patching plaster may also be used to fill small holes. After cleaning and before re-fixing each formwork, either of plywood or metal mould shall be got approved by the EIC.

Plywood boards shall be so used so as to maintain quality of the exposed surface. However if in the opinion of the Engineer's Representative any particular board has become unsatisfactory for use at any stage the board will be rejected.

3.0 Reinforcement

3.1 Reinforcement

All reinforcement shall be clean and free from loose mill scales, dust, loose rust, coats of paints, oil or other coatings which may destroy or reduce bond. It shall be stored in such a way as to avoid distortion and to prevent deterioration and corrosion.

3.2. Bending and Overlapping

Reinforcement shall be to the size and shape as shown in drawings and bent cold, correctly and accurately in accordance with IS: 2502 "Code of Practice for bending and fixing bars for concrete reinforcement". Preferably, bars of full length shall be used and shall not be straightened in a manner that will injure the material. Overlapping of bars, where necessary shall be done as per Indian Standard and as directed by the Engineer's Representative. The overlaps shall be staggered for different bars and located at points where neither shear nor bending moment is maximum. In case of mild steel, at the ends, hooks shall be provided and in case of deformed bars hooks are not required.

3.3. Placing in Position

Reinforcement bars shall be placed in position as shown in the drawings. The bars crossing one another shall be tied together at every intersection with 18 S.W.G. annealed steel wire to make the skeleton of the steel work rigid so that reinforcement does not get displaced during the deposition of concrete.Tack welding shall also be permitted in lieu of binding with steel wire if approved by the EIC.

The bars shall be kept in position by the following methods:

a) In case of beam and slab construction, precast cover blocks in cement mortar 1:2 (1 cement : 2 coarse sand) about 4 x 4 cm section and of thickness equal to the specified cover shall be placed between the bars and shuttering, so as to secure and maintain the requisite cover of concrete from reinforcement.
b) In case of cantilevered and double reinforced beams or slab and which distances between the horizontal bars shall be maintained by providing chair bars or support bars of steel at required spacing to avoid staging.
c) In case of columns and walls the vertical bars shall be kept in position by means of timber templates with slots accurately cut in them: or with block of cement mortar (1:2) suitably tied to the reinforcement.

3.4. Approval of Reinforcement

The Contractor must obtain the approval of the Engineer-in-Charge to the reinforcement, when placed, before any concrete is deposited on the shutters.

3.5. Water Proofing Compound

The structural water proofing compound of approved make and quality shall be added to the concrete and plaster work, as and where specified in accordance with the manufacturer's specifications stating the quantity of water proofing material in liters or kg. per 50 kg. of cement and will be paid for separately.

4.0 Damp Proof Course

This shall consist of 25 mm thick layer of cement concrete 1:2:4 (1 cement: 2 coarse sand: 4 graded stone aggregate 10mm nominal size), mixed in proportion by volume, along with CICo or equal approved structural water proofing compound, 2% by weight of cement and in accordance with manufacturer's instructions. The surface of brick work masonry shall be levelled and prepared before laying the cement concrete. Edges of damp course shall be straight even and vertical. Side shuttering shall consist of wooden forms and shall be strong and properly fixed so that it does not get disturbed during compaction and the mortar does not leak through. The concrete mix shall be of workable consistency and shall be tamped thoroughly to make a dense mass. When the sides are removed, the surface should come out smooth without any honey-combing.

5.0 MASONRY WORK

5.1 General

This section shall cover Brick Work, cement concrete hollow/solid block work and stone masonry work, molding and cornice wok etc.

5.2 Masonry Works

All masonry works shall be carried out in accordance with C.P.W.D. specifications, 1977 including amendments thereafter unless otherwise specified.

6.0 FLOORING

6.1 General

This section shall code generally but not restricted to cement flooring, cement plates rises of steps, spirting and dado, terrazzo flooring. Terrazzo riser of steps, skirting and dado marbles and catosone flooring, skirting counteous and glazed tiles in dado.

6.2 Specifications

All flooring work of type as detailed above shall be carried out in accordance with technical specifications as described in CPWD specifications 1977 including amendments unless otherwise specified hereinafter.

7.0 FINISHING

7.1 General

Finishing work of specified types shall be carried out on different areas of buildings as specified, shown in drawings and as described in the item of the scheduled of quantities.

Finishing works shall include generally plastering on internal and external walls, columns, ceilings/soffits of slabs and beams white washing/colour washing on walls and ceilings, paintings of walls and ceiling with emulsion paint, cement paint on external walls, painting/varnishing work on steel/wood surface as specified.

7.2 Specifications

Generally all finishing work as stated above shall be carried out in accordance with C.P.W.D. specifications, 1977 including all amendments unless otherwise specified hereinafter.

8.0. WOOD WORK AND FITTINGS

8.1. General

This section shall cover all Wood work, joinery and similar work in the building. All wood work associated with work of all other sections shall also be done generally according to this specifications unless specified otherwise.

8.2 Specifications

Generally all wood work as specified shall be carried out in accordance with specifications for wood work described in C.P.W.D. Specification No. 1977 including amendments thereafter except those specified hereinafter.

No wood work shall be painted, varnished, polished or finished otherwise before specifically approved by the Engineer-in-Charge.

All works shall be fixed in the manner shown in the drawings. If not shown, fixing with masonry or concrete shall be done with plugs, screws, hold fasts of approved size, as specified in C.P.W.D. specifications and as directed by the Engineer-in-Charge.

All works shall be done in workmanlike manner and shall meet the approval of the Engineer-in-Charge.

8.3. Frame work for false ceiling

All frame work for false ceiling shall be done with second class Kail wood or Deodar wood as specified in drawing. The wood battens shall be securely fixed to walls and columns by bolts and to the slab above with MS straps or bars of suitable sections, anchored therein. All wood framing for false ceiling shall be given two coats of approved fire resistant coating. The underside of the framing shall be true to planes and slopes. Bottom of the frames shall be true to levels.

8.4. Particle Board

All particle board shall be teak wood particle board bonded with BWP type Phenol Formaldehyde synthetic resin conforming to IS: 3097 – 1980 Exterior Grade.

8.5. Factory Made panelled Door

Factory made panel door shall be made of kiln seasoned and preservative treated (under vacuum pressure) approved hardwood stiles and rails, vertical stiles and top rails of 100 mm width and bottom rail 200 mm and lock rail of 150 mm width and panels of 12 mm thick both sides Commercial veneered particle board bonded with BWP type phenol formaldehyde synthetic resin generally conforming to IS: 3097 – 1980 exterior grade. The overall specifications of the door shall be as per IS: 1003 (Part-I) 1977.

9.0. ROOFING

9.1. General

This section of specifications shall cover all work of lime terracing, water proofing, particle board/gypsum board false ceiling A.C. sheet, plywood false ceiling and corrugated G.I. sheet or PVC sheet roofing as shown.

All roofing and false ceiling work shall be carried out in accordance with C.P.W.D. specifications, 1977 including amendments unless otherwise specified hereinafter.

No work under this section shall be started until all surfaces have been inspected and approval obtained from the Engineer-in-Charge. All defects noticed shall be made good as directed.

9.2. Plywood False Ceiling

Frame work shall be of the specified wood wrought and framed on the prepared and properly planed wooden frame work, approved 6 mm plywood shall be fixed by means of nails. Care shall be taken to see that the joints of sheets are aligned and have gaps as shown at the frames. The sheet shall be straight, tight and perfectly true to planes and levels and without any sagging. Surface shall be smooth and true to plane as in accordance with slopes and curves as required.

9.3. Gypsum Board False Ceiling

The Gypsum Board shall be of approved proprietary manufacture such as Indian Gypsum Ltd's "Gypboard" formed by enclosing and bonding core of set calcium sulphate (Gypsum) plaster by two sheets of paper. It shall be fire resistant, unless otherwise indicated all boards shall be 12 mm thick.

On the prepared and properly planed wooden false ceiling framing gypsum boards shall be fixed to the framing with brass screws. The work shall be done strictly following the manufacturers printed instruction and standard details.

All joints shall be filled by approved jointing compound recommended by the manufacturers and paper tape pressed into it. All screws heads shall be spotted and depression over the head shall be filled, flush with the board surface. After the joints have dried, a thin layer of jointing compound shall be applied as the first coat of finish followed by the same treatment as second coat of finish. Finally two coats of top coat shall be applied on entire surface to give smooth seamless ceiling surface. The finished surface shall be free from waive ness and shall be with required cut outs for light fitting etc.

9.4. Corrugated Sheet Roofing

Corrugates sheets shall be 1.5 mm thick and of approved make. The material shall be guaranteed to suit the specific climate of the region. It shall be laid and fixed in accordance with C.P.W.D. specification for A.C. Sheet roofing and as per manufacturers printed instructions.

10.0 Aluminum Sections

Aluminum sections used for fixed / open able windows, ventilators, partitions, frame work & doors etc. Shall be suitable for use to meet architectural designs to relevant works and shall be subject to approval of the Engineer-in-Charge for technical, structural, functional and visual considerations. The aluminium extruded sections shall conform to IS 733 and IS 1285 for chemical composition and mechanical properties. The stainless steel screws shall be of grade AISI 304. The permissible dimensional tolerances of the extruded sections shall be as per IS 6477andshallbe such as not to impair the proper and smooth functioning/operation and appearance of door and windows.

Aluminium glazed doors, windows etc. shall be of sizes, sections and details as shown in the drawings. The details shown in the drawings may be varied slightly to suit the standards adopted by the manufacturers of the aluminium work, with the approval of Engineer-in-Charge. Before proceeding with any fabrication work, the contractor shall prepare and submit, complete fabrication and installation drawings for each type of glazing doors, windows, ventilators and partition etc. for the approval of the Engineer-in-Charge. If the sections are varied, the contractor shall obtain prior approval of Engineer-in- Charge and nothing extra shall be paid on this account.

Anodising

Standard aluminium extrusion sections are manufactured in various sizes and shapes in wide range of solid and hollow profiles with different functional shapes for architectural, structural glazing, curtain walls, doors, window & ventilators and various other purposes. The anodizing of these products is required to be done before the

fabrication work by anodizing/electro coating plants which ensures uniform coating in uniform colour and shades. The extrusions are anodized upto 30 micron indifferent colours. The anodized extrusions are tested regularly under strict quality control adhering to Indian Standard.

Powder Coating

Material: The powder used for powder coating shall be Epoxy/polyester powder of make approved by the Engineer-in-Charge. The contractor shall give detailed programme for powder coating in advance, to facilitate the inspection by Engineer-in-Charge or his authorized representative.

Pre-treatment: Each aluminium alloy extrusion or performed section shall be thoroughly cleaned by alkaline or acidic solutions under the conditions specified by chemical conversion coating supplier and then rinsed. A chemical conversion coating shall be applied by treatment with a solution containing essentially chromate ions or chromate and phosphate ions as the active components as applicable. The amount of the conversion coating deposited depends on the type used by the conversion coating chemical supplier. The conversion coating shall be thoroughly rinsed either with the solution specified by the conversion coating chemical supplier or with de-mineralized water and then dried at the temperature for the time specified by the conversion coating chemical supplier. The contractor shall submit the detail specifications and application procedure for application of conversion coating for approval of Engineer-in-Charge. The metal surface after the conversion coating pre treatment and prior to the application of the coating shall be free from dust or powdery deposits.

Thickness: The thickness of the finished polyester powder coating measured by micron meter shall not be less than 50 micron nor more than 120 micron at any point.

Performance Requirements for the Finish

(i) *Surface appearance:* The finish on significant surfaces shall show no scratches when illuminated and is examined at an oblique angle, no blisters, craters; pinholes or scratches shall be visible from a distance of about 1m.There shall not be any visible variation in the colour of finished surfaces of different sections and between the colours of different surfaces of same section.

(ii) *Adhesion:* When a coated test piece is tested using a spacing of 2mm between each of the six parallel cuts (the cut is made through the full depth of powder coatings o that metal surface is visible) and a piece of adhesive tape, approximately 25 mm x 150 mm approved by the Engineer-in-Charge is applied firmly to the cut area and then removed rapidly by pulling at right angles to the test area, no pieces of the finish other than debris from the cutting operation shall be removed from the surface of the finish.

Protection of Powder Coated / Anodizing Finish : It is mandatory that all aluminium members shall be wrapped with self-adhesive non-staining PVC tape, approved by Engineer-in-Charge.

PANELINGMATERIAL

Pre-laminated Particle Board

A particles board laminated on both surfaces by synthetic resin impregnated base papers under heat and pressure. Pre-laminated particle boards shall

be of two grades, namely, Grade I and II corresponding to IS 3087 & 12823. Each of the grades specified shall be of four types, namely, Types-I, II, III, and IV classified by the surface abrasion characteristics specified in Table below. The grade and types of pre-laminated particle board shall be represented by symbols as follows:

Grade	*Type*	*Designation*
GradeI	TypeI	PLB-11
	TypeII	PLB-12
	TypeIII	PLB-13
	TypeIV	PLB-14
GradeII	TypeI	PLB-21
	TypeII	PLB-22
	TypeIII	PLB-23
	TypeIV	PLB-24

* *Cyclic Test:* Specimen are immersed in water at 27±2° C for a period of 72 hours, followed by drying in air at 27±2° C for 24 hours and then heating in dry air at 70° C for 72 hours. Three such cycles are to be followed and then specimens are tested for tensile strength perpendicular to the surface.

** *Accelerated Water Resistance Test:* Specimens are immersed in water at 27±2° C and water is brought to boiling and kept at boiling temperature for two hours. Specimens are then cooled in water to 27±2^{O}c and tested for tensile strength perpendicular to the surface.

Particle Board: Synthetic resin bonded flat pressed three layers, multi layer and graded particle board defined in IS 3087 having super fine surface shall be used for production of pre laminated particle board. For ECO Marks the particle board shall also conform to the requirements of ECO Mark specified in IS 3087.

Impregnated Base Paper: Printed or plain coloured absorbent base paper having a weight of
60-140g/m^{2} impregnated in a suitable synthetic resin and dried to a volatile content of 4-8 percent shall be used for pre-lamination on both surfaces of particle board.

Impregnated Overlay: An absorbent issue, paper having a weight of 18-40g/m^{2} impregnated in a suitable synthetic resin and dried to a volatile content of 4-8 per cent shall be used for the manufacture of pre-laminated particle board.

Door Latch

This shall be of mild steel, cast brass, or as specified and shall be capable of smooth sliding action. In case, of mild steel latch, it shall be copper oxidized (black finish)or as specified and in case of brass, it shall be finished bright, chromium plated or oxidized or as specified. The size of door latch shall be taken as the length of the latch.

Indicating Bolt (Vacant/Engaged*)*

These shall be of cast brass finished bright chromium plated, or oxidized or as specified. The shape and pattern shall be approved by the Engineer-in-Charge.

Mortice Lock and Latch

This should generally conform to IS 2209.

The size of the mortice lock shall be denoted by the length of the body towards the face and it shall be 65mm,75mm and 100mm as specified. The measured length shall not vary more than 3mm from the length specified.

Non-interchangeable Keys: Testing of non-interchangeable keys shall be as per IS 2209.

The clear depth of the body shall not be more than 15mm.Thefore end shall be firmly fitted to the body suitably by counter sunk head screw. The latch bolt shall be of specified material and of section not less than 2x16 mm for all sizes of locks. If made of two piece construction both parts shall be rivetted. Ordinary lever mechanism with not less than two levers shall be provided. False levers shall not be used. Lever shall be fitted with one spring of phosphor bronze or steel wire and shall withstand the tests as provided in IS 2209.

Locking bolts, spring and strike plate shall conform to IS 2209.

Handles: These shall conform to IS 4992.

Keys: Each lock shall be provided with two keys.

Mortice Latch (with Locking Bolt)

These are generally used in doors of bathrooms, WC's and private rooms.

Mortice latch shall, in respect of shape, design and mechanism of the latch and its components parts, generally conform to IS 5930.The material used for the different component parts of the latch shall comply with Tables1 and 2 of IS 5930, unless otherwise specified.

The size of the latch shall be denoted by the length of the body towards the face and shall be 65mm, 75mm or 100mm as specified. The depth of the body shall not be more than 15mm. The latch shall be of size 10×18 mm of shape as in IS 5930.The locking bolt shall be of section not less than 8x25mm for all size of locks. The mechanism of the latch bolt , its spring, striking plate etc. shall be as described in IS 5930. The handles provided shall conform to IS 4992.

Mortice Lock and Latch (Rebated)

These are slightly different from mortice lock described in 9.15.14 and are designed for use in double leaved doors. These should generally conform to IS 6607.

Handles, Keys, Sampling, Criteria for Conformity and Test :These shall be same as specified.

Mortice Night Latch

This is a mortice lock having a singles pring bolt withdrawn from the outside by using the key and from inside by turning the knob and with an arrangement where by the lock can be prevented from being opened by its key from outside while the night latch is used from inside the room. This should generally conformtoIS3847.

It shall be castor sheet brass, castor sheet aluminum alloy or Mild steel as specified and of best quality of approved make. These shall be bright finished or copper oxidized (black) finish as specified. Nominal size of the latch shall bede noted by the length of the face over the body in mille- meters. These shall have not less than two levers. False (Dummy) levers shall not be allowed.

Keys :Each latch shall be provided with two keys which should work smoothly and without any appreciable friction in the lock.

Door Handles (Doors and Windows)

These should generally conform to IS 208.The door handles shall be well made and free from defects. These shall be finished correct to shape and dimensions. All edges and corners shall be removed and finished smooth so as to facilitate easy handling. Cast handle shall be free from casting defects. Where the grip portion of the handle is joined with the base piece by mechanical means, the arrangement shall be such that the assembled handle shall have adequate strength comparable to that of integrally cast type handles.

Door handles shall be of the following types according to the material used:

(a)Castor Sheet Aluminium Alloy Handles: These shall be of aluminium of specified size, and of shape and pattern as approved by the Engineer-in-Charge. The size of the handle shall be determined by the inside grip of the handle. Door handles shall be of 100mm size and window handles of 75mm size unless, otherwise specified. These shall be fixed with 25mm long wood screws of designation No. 6. Aluminium handles, shall be anodized and the anodic coating shall not be less than grade AC15–IS 1868 as specified. The finish can be bright natural, matt or satin or dyed as specified. (b) Cast Brass Handles: These shall be of cast brass of specified size and of the shape and pattern as approved by the Engineer -in-Charge. The size of the handle shall be determined by the inside grip of the handle. Door handles shall be of 100mm size and window handles of 75mm size, unless otherwise specified. These shall be fixed with 25mm long wood screws of designation No 6. Brass handles shall be finished bright satin or nickel chromium plated or copper oxidized or as specified.

(c)***Mild Steel Handles:*** These shall be of mild steel sheet, pressed into oval section. The size of the handles will be determined by the inside grip of the handle. Door handles shall be10 mm size and window handles of 75mm size unless otherwise specified. These shall be fixed with 25 mm long wood screws of designation No.6.,Iron handles shall be copper oxidized (black finish) or stove enameled black or as

specified.

Floor Door stopper

The floor door stopper shall conform to IS 1823. This shall be made of cast brass of overall size as specified and shall have rubber cushion. The shape and pattern of stopper shall be approved by the Engineer-in-Charge. It shall be of brass finished bright, chromium plated or oxidized or as specified. The size of floor stopper shall be determined by the length of its plate. It shall be well made and shall have four counter sunk holes for fixing the door stoppers to the floor by means of wood screws. The body for housing of the door stopper shall be cast in one piece and it shall be fixed to the cover plate by means of brass or mild steel screws and cover plate shall be of casting or of sheet metal. The spring shall be fixed firmly to the pin. Tongue which would be pressed while closing or opening of the door shall be connected to the lower part by means of copper pin. On the extreme end a rubber piece shall be attached to absorb shock. All parts of the door stopper shall be of good workmanship and finish, burrs and sharp edges removed. It shall be free from surface and casting defects. Aluminum stopper shall be anodized and anodic film shall not be less than grade AC-10 of IS 1868.

Universal Hydraulic Door Closer (Exposed type)

These shall be made of cast iron/ aluminum alloy/zinc alloy and of shape and pattern as approved by the Engineer-in-Charge. These shall generally conform to IS Specifications for door closers (Hydraulically regulated) IS 3564.

The door closers may be polished or painted and finished with lacquer to desired colour. Aluminum alloy door closer shall be anodized and the anodic coating shall not be less than grade AC 15 of IS 1868. All dents, burrs and sharp edges shall be removed from various components and they shall be pickled, scrubbed and rinsed to remove grease, rust, scale or any other foreign elements. After pickling, all the M.S. parts shall be given phosphate treatment in accordance with IS 3618.

Manufacture: Particle boards having super fine and closed surface with high face strength and steep density gradient across the thickness is used for making pre laminated particle boards. Impregnated base papers rich in a synthetic resin are placed on either side of the particle board and the assembly is taken inside a short cycle single opening lamination press or a multi-day light press. Under heat and pressure the resin flows and forms a permanent bond with particle board.

The top surface of impregnated paper comes in contact with special surface chromium plates or steel caul plates and takes the impression of surface finish of these cauls. Hot boards are extracted out of the short cycle press and cooled in air, whereas cooling of boards is done inside the dress in multi day light type. Care should be taken to keep cycle time slow in the press to avoid heat penetration to the centre of the boar edge.

The impregnated over lay paper may be used by placing it over the impregnated base paper (IBP) on one surface while using a normal IBP on the other surface and pressure. The impregnated overlay becomes transparent after pressing. Such boards

are used for high surface abrasion application.

In case of finished foil particle boards, the finished foil is pasted on both surfaces of particle board after spreading suitable synthetic glue on board's surface and passing the assembly in a roller press or a flat press under the influence of pressure and /or heat depending on the type of binder used.

***Finish*:** The finish of the paper over laid board depends on the surface of caul plates used. Common surface finishes in use are glossy, matt textured (soft, Swede, wood pore and leather), etc. The surface finish of the foil finished boards depends on the original finish of the foil used.

Float Glass

The glass shall be clear float glass and should be approved by the Engineer in Charge. It shall be clear, float transparent and free from cracks subject to allowable defects. The float glass shall conformtotheIS14900.

Thickness: The thickness of float glass shall depend on the size of panel. The tolerance in thickness shall be as under:

TABLE

NominalThickness (inmm)	*Tolerance (inmm)*
4.0	± 0.3
5.0	±0.3
6.0	±0.3
8.0	±0.6

DOOR, WINDOW, VENTILATOR AND PARTITION FRAMES

Frame Work

First of all the shop drawings for each type of doors/ windows/ ventilators etc. shall be prepared by using suitable sections based on architectural drawings, adequate to meet the requirement/ specifications and by taking into consideration varying pro files of aluminium sections being extruded by approved manufacturers. The shop drawings shall show full size sections of glazed doors, windows, ventilators etc. The shop drawings shall also show the details of fittings and joints. Before start of the work, all the shop drawings shall be got approved from the Engineer-in-Charge.

Actual measurement of openings left at site for different type of door/ window etc. shall be taken. The fabrication of the individual door/ windows/ ventilators etc. shall be

done as per the actual sizes of the opening left at site. The frames shall be truly rectangular and flat with regular shape corners fabricated to true right angles. The frames shall be fabricated out of section which have been cut to length, mitered and jointed mechanically using appropriate machines. Mitered joints shall be corner crimped or fixed with self-tapping stainless steel screws using extruded aluminium cleats of required length and profile. All aluminium work shall provide for replacing damaged/broken glass panes without having to remove or damage any member of exterior finishing material.

Fixing of Frames

The holes in concrete/masonry/wood/any other members for fixing anchor bolts/fasteners/screws shall be drilled with an appropriate electric drill. Windows/doors/ventilators etc. shall be placed incorrect final position in the opening and fixed to Sal wood backing using stainless steel screws of star headed, counter sunk and matching size groove. of required size at spacing not more than 250mm c/ c or dash fastener. All joints shall be sealed with approved silicone sealants.

In the case of composite windows and doors, the different units are to be assembled first. The assembled composite units shall be checked for line, level and plumb before final fixing is done. Engineer-in-Charge in his sole discretion may allow the units to be assembled in their final location if the situation so warrants. Snap beadings and EPDM gasket shall be fixed as per the detail shown in the shop drawings.

Where aluminum comes in to contact with stone masonry, brick work, concrete, plaster or dissimilar metal, it shall be coated with an approved insulation lacquer, paint or plastic tape to ensure that electro chemical corrosion is avoided. Insulation material shall be trimmed off to a clean flush line on completion.

The contract or shall be responsible for the doors, windows etc. being set straight, plumb, level and for their satisfactory operation after fixing is complete.

DOOR, WINDOWS AND VENTILATOR SHUTTERS

Material, fabrication and dimensions of aluminium doors, windows and ventilators manufactured from extruded aluminium alloy sections of standard sizes and designs complete with fittings, ready for being fixed in to the building shall be as per IS1948.

FITTINGS

Stainless Steel Friction Stay

The stainless steel friction stays of make approved by the Engineer-in-Charge shall be used. The SS friction stays shall be of grade AI SI-304 and of sizes specified in nomenclature of item.

Lockable Handles

The lockable handle shall be of make approved by the Engineer-in-Charge and of required colour to match the colour of powder coated/anodized aluminium window sections.

Hydraulic Floor Spring

The hydraulic floor spring shall be heavy duty double action floor spring of make approved by the Engineer-in-Charge suitable for door leaf of weight minimum 100kg.The top cover plate shall be of stainless steel, flushing with floor finish level. The contractor shall cut the floor properly with stone cutting machine to exact size & shape. The spindle of suitable length to accommodate the floor finish shall be used. The contractor shall give the guarantee duly supported by the company for proper functioning of floor spring atleast for 10 years.

Tubular Handle

The tubular handle bar shall be aluminium polyester powder coated minimum 50 micron to required colour/ anodized AC 15. Outer dia of tube shall be 32 mm, tube thickness 3.0 mm and centre to centre length 2115mm±5mm.

BRASS LOCK

This should generally conform to IS-2209. The size of the lock shall be denoted by the length of the body towards the face and it shall be 100mm. the measured length shall not vary more than 3 mm from the specified length. Ordinary lever mechanism with not less than 2 levers shall be provided. False lever shall not be used. Lever shall be fitted with one spring of phosphor-bronze or steel wire and shall withstand the test as provided in IS-2209. Locking-bolt spring and strike plate shall conform to IS 2209. Two keys shall be provided with each lock.

SECTION – 3

SPECIFICATION FOR PLUMBING & SANITATION WORKS

3.0 PLUMBING WORK

3.1.0 SCOPE OF WORK

3.1.1 This section shall generally cover plumbing and sanitation installations, which shall include but not necessary limited to:

a) Sanitary Fixtures

b) Soil, Waste and Vent Pipes

c) Water Supply (Internal and External)

d) Excavation for pipes

e) Rain Water Pipes

f) Drainage (Sewers and Storm Water Drains)

3.2.0 General

3.2.1 Unless otherwise specified, Technical Specifications of Works shall generally conform to the relevant C.P.W.D. Specifications of latest edition including amendments thereafter.

3.2.2 Works not covered by C.P.W.D. Specifications shall carried out as per relevant Indian Standard Specification or Code of Practice or as instructed by the Engineer-in-Charge.

Road works :

The detailed specifications for road works shall conform to 'CPWD specification' (Latest edition). In case of items which do not mention in the CPWD specifications, the latest 'IRC Specifications'/relevant IS codes shall be followed.

LIST OF APPROVED MAKES OF BUILDING MATERIALS

1.0 General

Unless otherwise specifically mentioned all materials to be used shall conform to Indian Standard Specifications.

2.0 LIST OF APPROVED MAKES FOR CIVIL WORK

	Item	Make
1	PLYWOOD/BLOCK BOARD KITPLY OR EQUIVALENT	KITPLY, GREENPLY, TODAY
2	LAMINATE	GREENPLY, KITPLY OR EQUIVALENT
3	LOCKS	GODREJ/HARISON OR EQUIVALENT
4	PAINT	JONSON & NICHOLSON, NEROLAC PAINTS, ASIAN PAINTS & BURGER
5	GLAZED TILES	KAZARIA, SOMANEY, JOHNSONS , NITCO or equivalent
6	GLASS	MODI SANIT GOVIND, TATA & ATUL
7	ALUMINIUM FOR GLAZING	HINDALCO OR EQUIVALENT

3.0 LIST OF APPROVED MAKES OF PLUMBING MATERIAL

	Item	Make
1	VITREQUS CHINA AND FIRECLAY SANITARYWARE	PARRY, CERA, HINDUSTAN OR EQUIVALENT
2	C.P. FITTINGS & ACCESSORIES	ESS-ESS, PRAYAG, JAGUJAR
3	PVC CISTERN	PRAYAG, CERA
4	C.P. WASTE	PRAYAG, CERA
5	SOILS, WASTE & RAINWATER PIPES & FITTING	RIF, ISI MAKE OR EQUIVALENT
6	G.I. PIPES	JINDAL OR EQUIVALENT
7	G.I. FITTINGS (MALLEABLE CAST IRON)	JINDAL, UNIQUE OR EQUIVALENT
8	BIB & STOP COCKS (BRASS)	CERA, ESS-ESS
9	BALL COOCS	-- DO --
10	POLYURETHANE WATER STORAGE TANK	SINTEX, POLYCON, STOREX OR EQUIVALENT
11	STONEWARE PIPES & GULLY TRAPS	PERFECT, BURN OR EQUIVALENT
12	C.I. MANHOLES	B.C. VARUNA, R.I.F. OR EQUIVALENTsafety

TENDER DRAWINGS

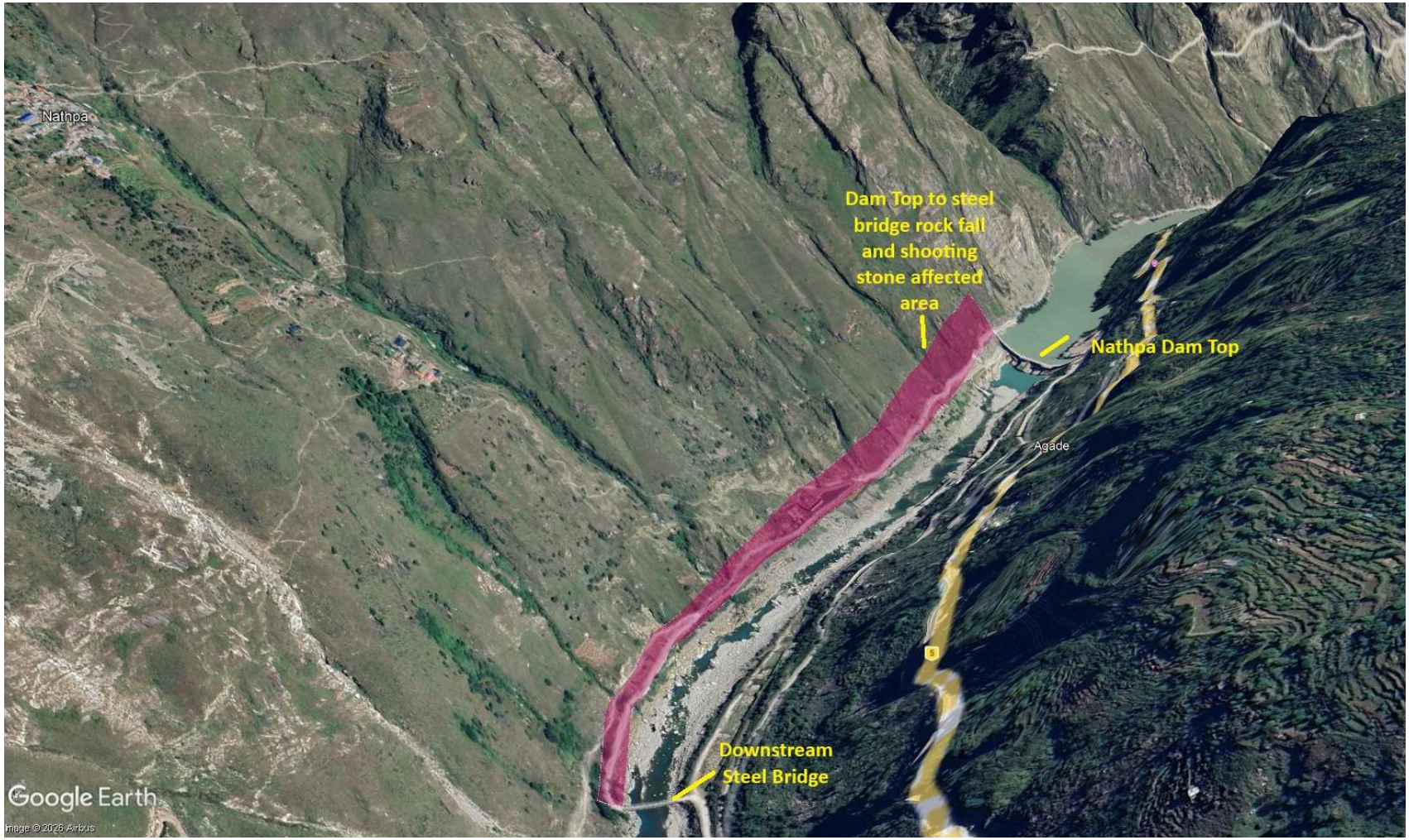

Schematic plan: steel bridge to dam top (right bank)

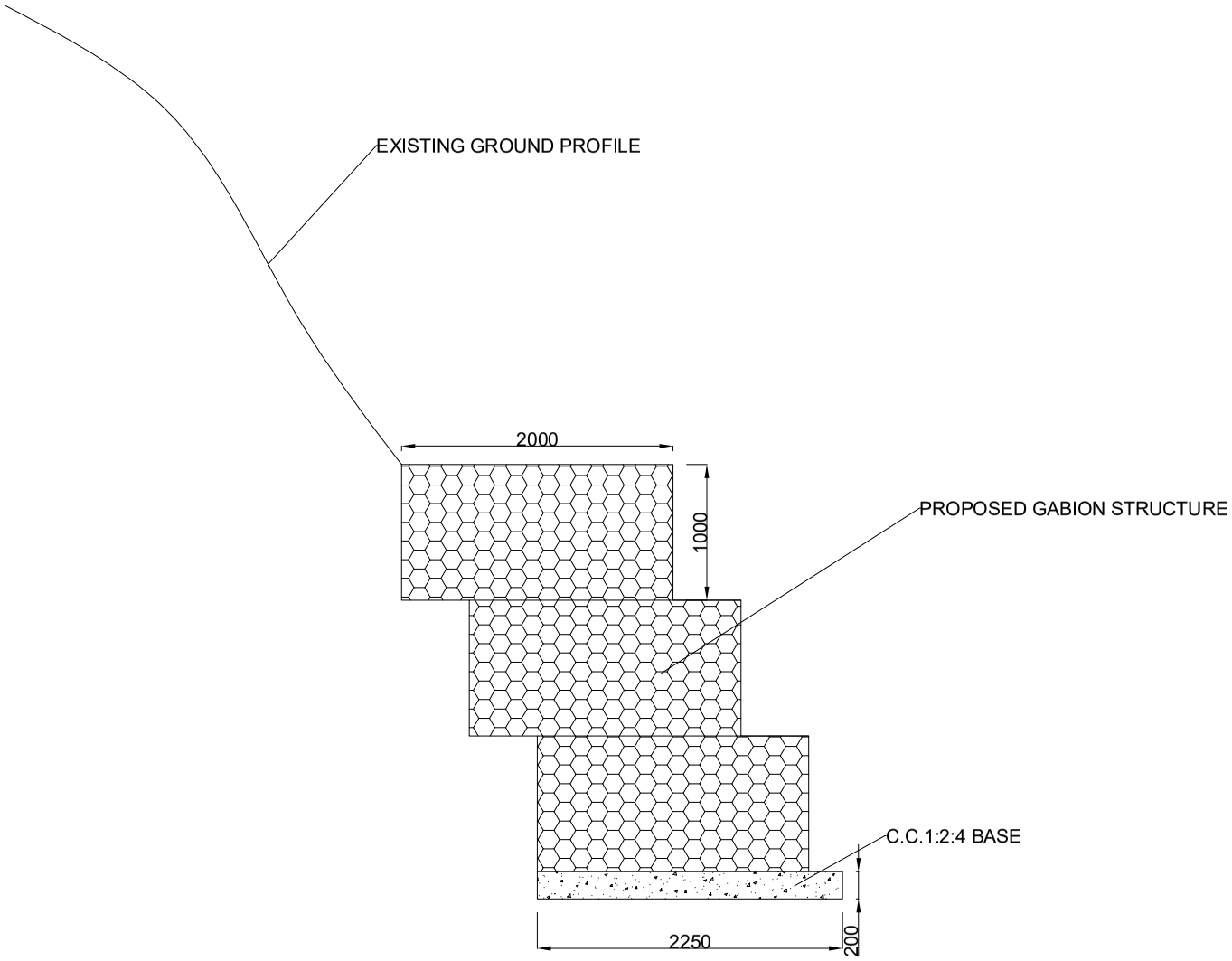

TYPICAL X-SECTION OF PROPOSED PROTECTION WORK BETWEEN RD 1129.00M to 1159.00m

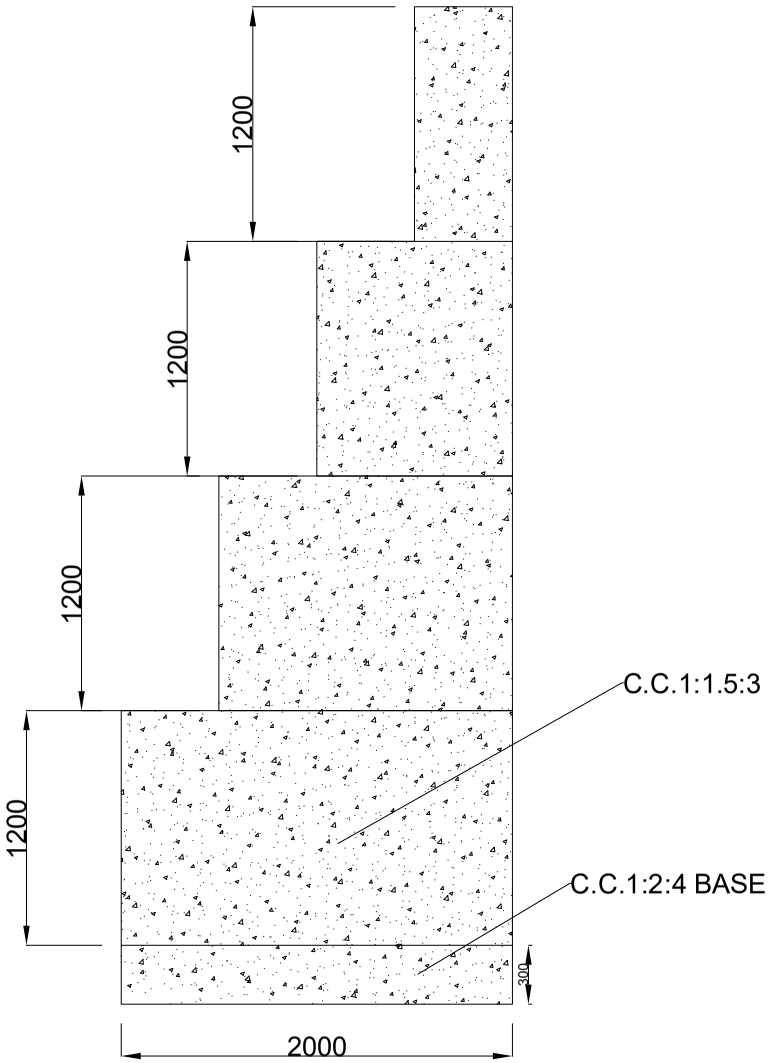

TYPICAL X-SECTION OF PROPOSED PROTECTION WORK OUTSIDE OF NATHPA NALLA CULVERT

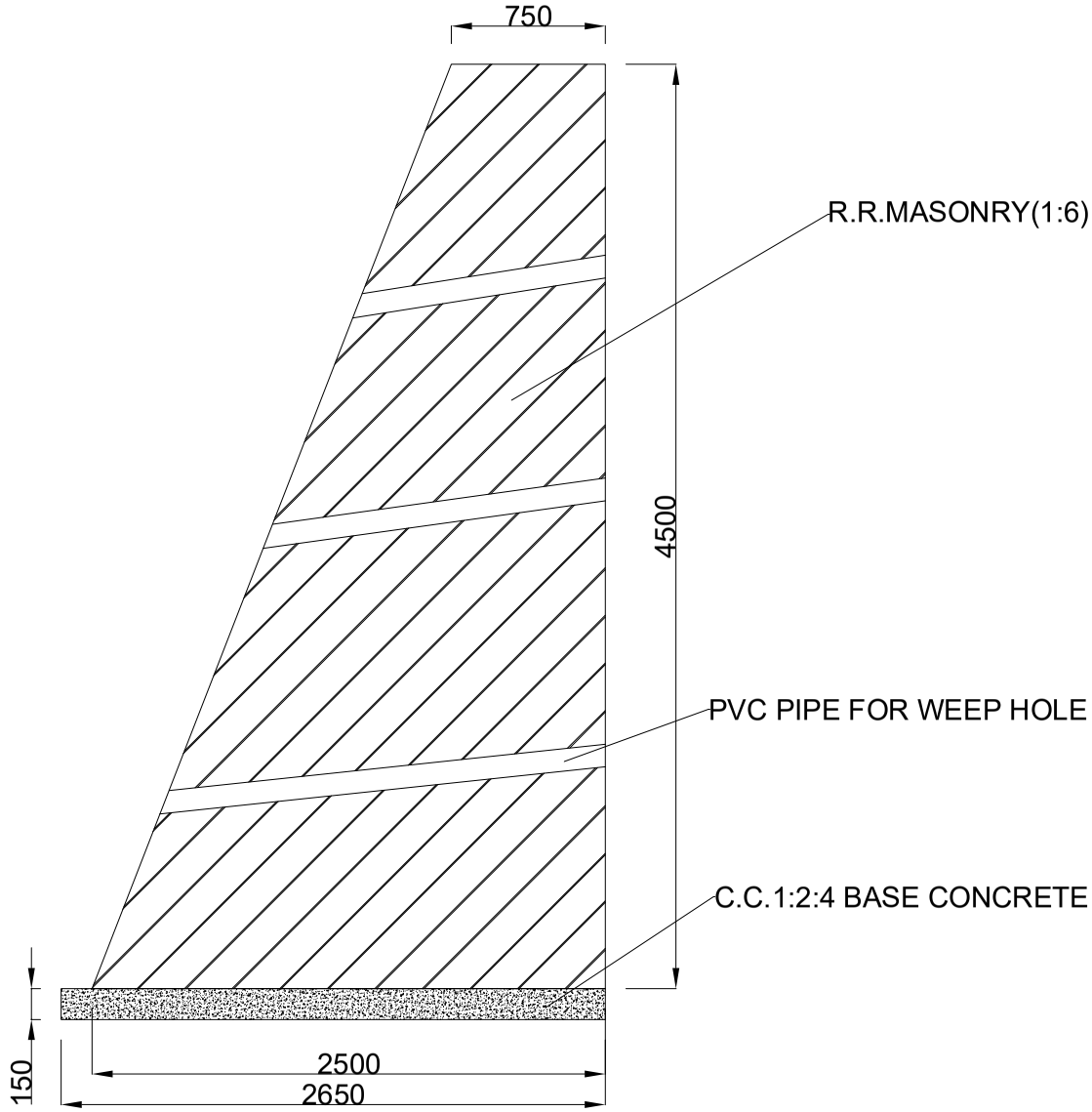

TYPICAL X-SECTION OF PROPOSED RR MASONRY WALL FROM RD 912.00 TO 930.00M

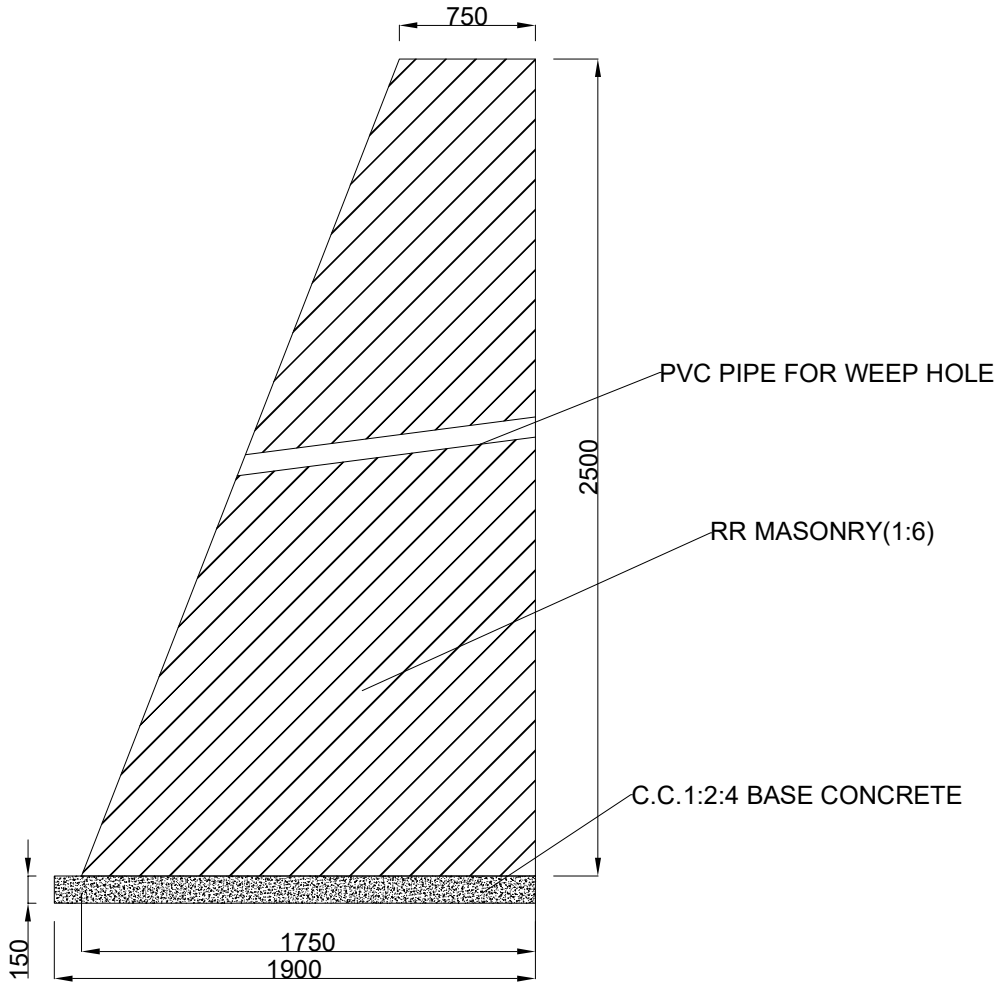

TYPICAL X-SECTION OF PROPOSED RR MASONRY WALL FROM RD 930.00 TO 960.00M

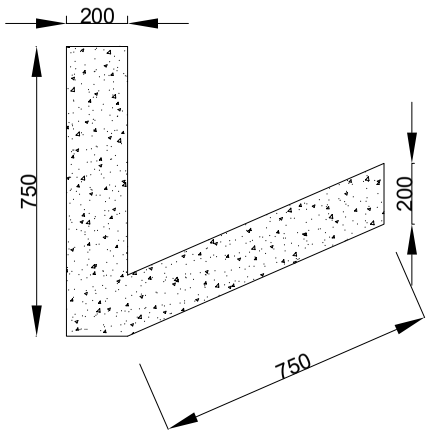

TYPICAL X-SECTION OF PROPOSED
CEMENT CONCRETE SIDE DRAIN FROM RD
405.00 TO 573.00M AND 977.00 TO 1490.00M

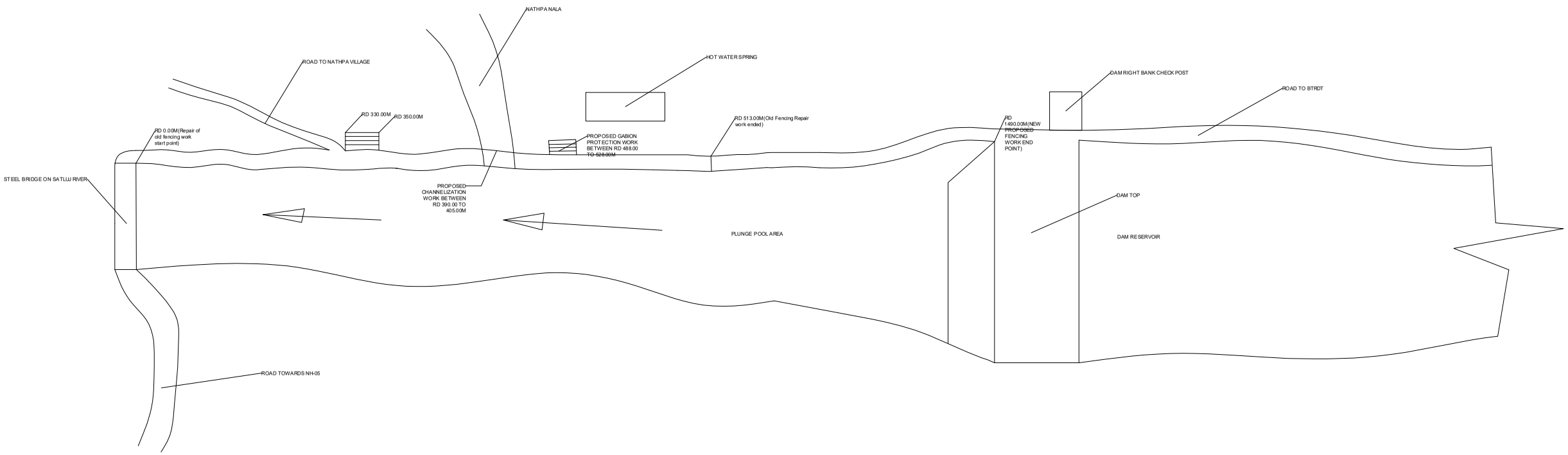

GENERAL LAYOUT PLAN OF PROPOSED WORK

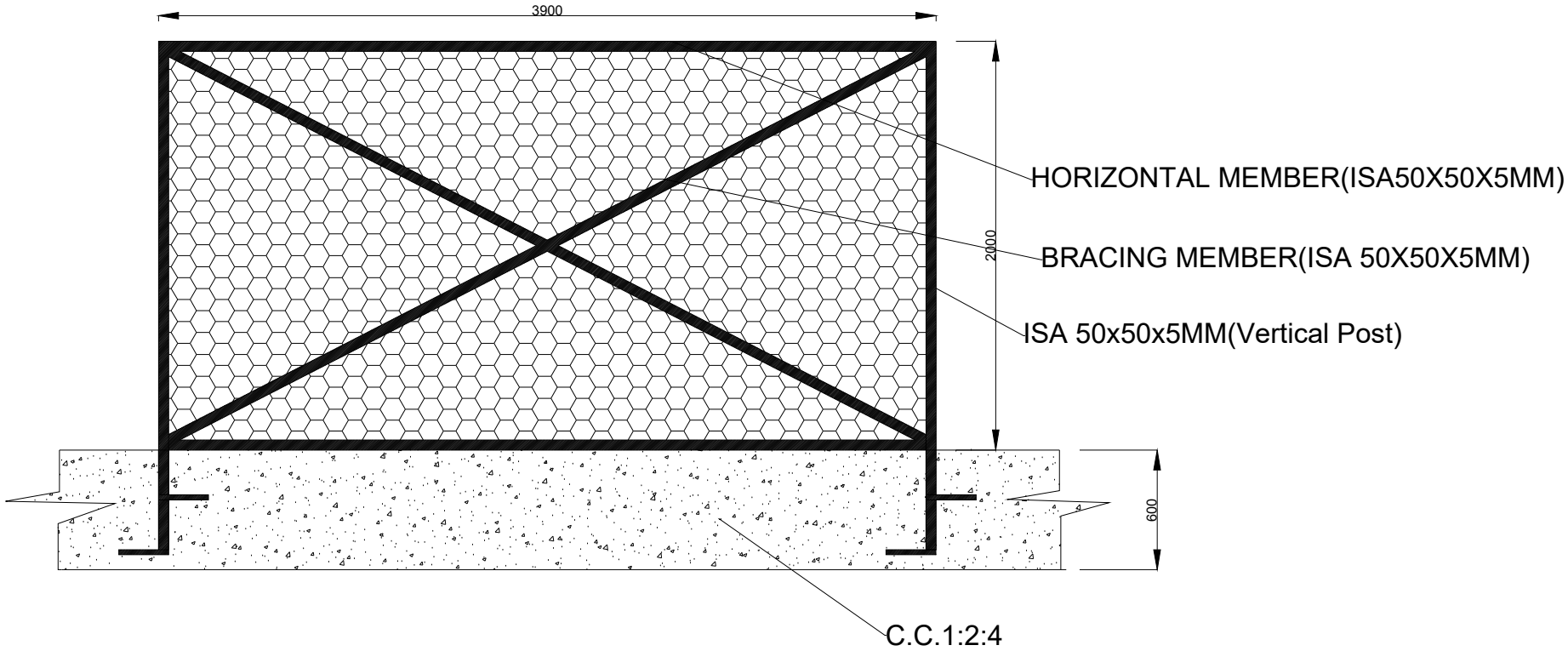

TYPICAL DETAIL OF CHAIN LINK FENCING BETWEEN RD 0.00M TO 513.00M

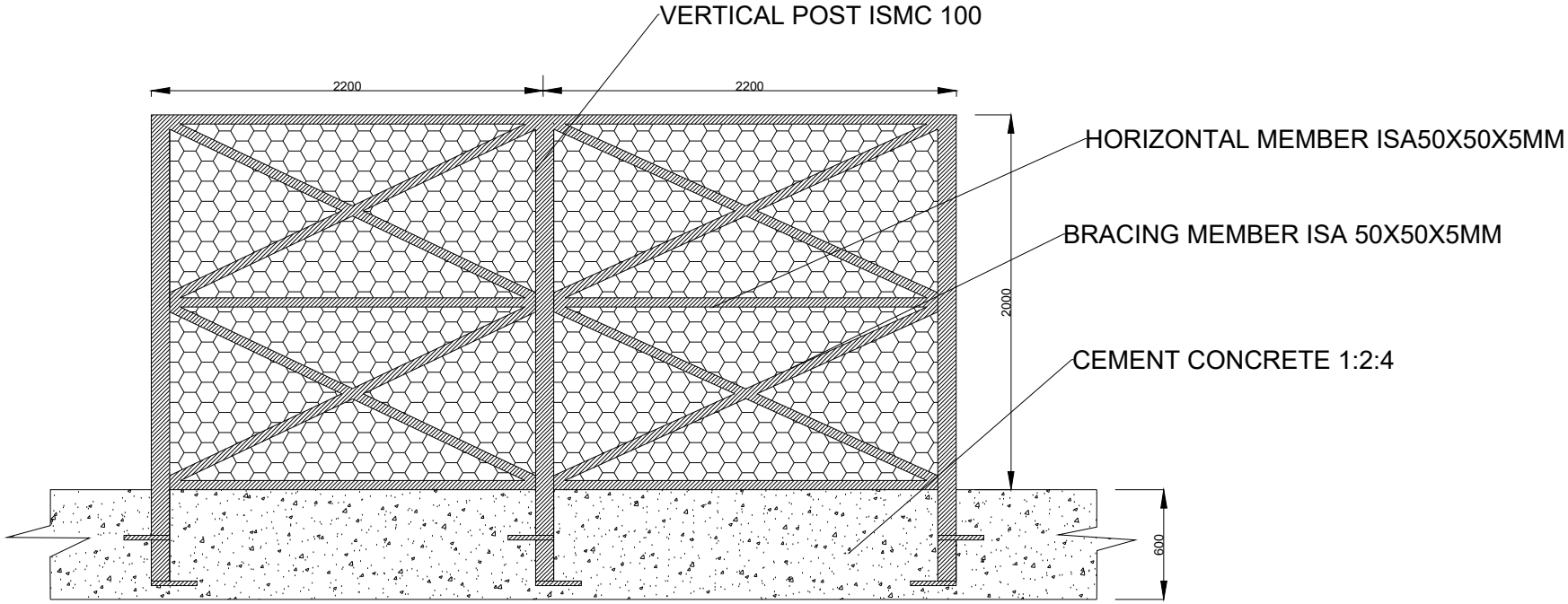

TYPICAL DETAIL OF PROPOSED CHAIN LINK FENCING BETWEEN RD 513.00M TO 1490.00M

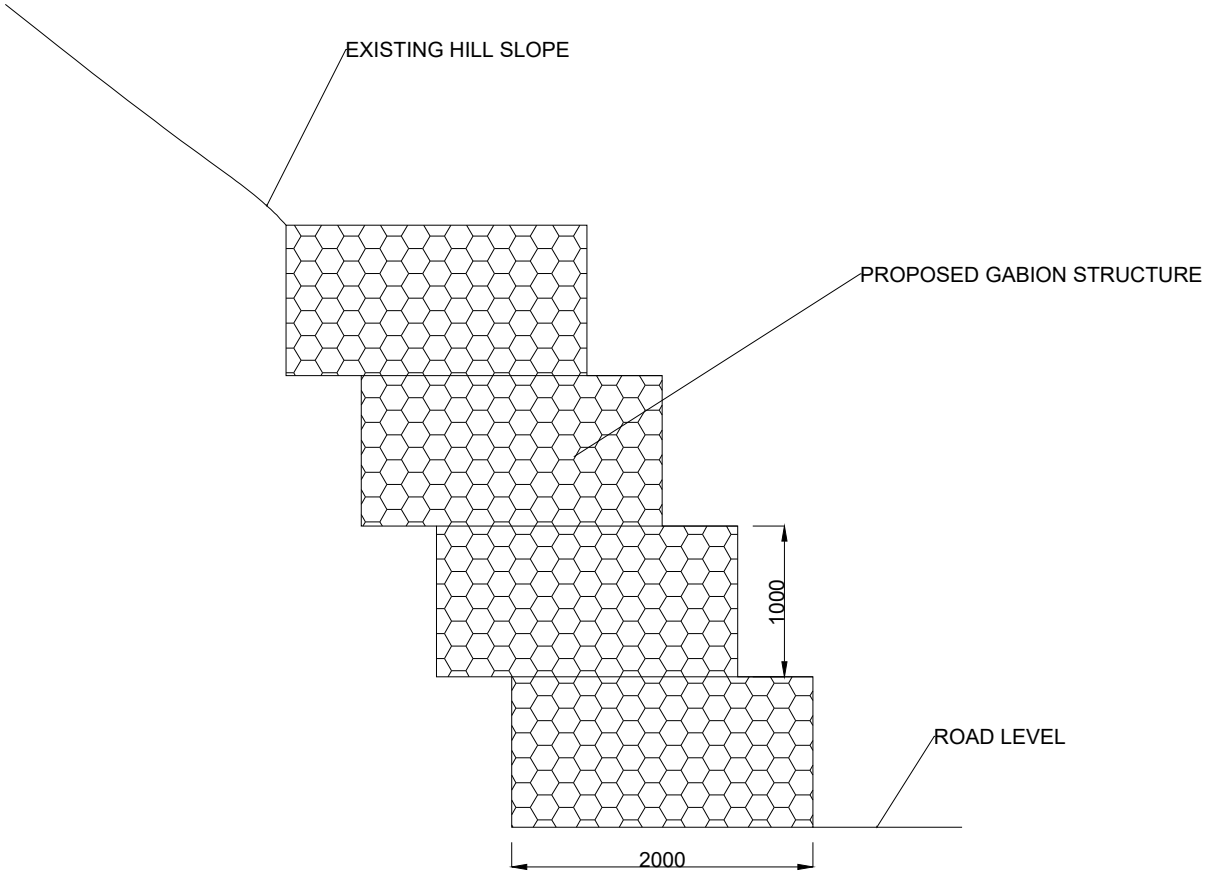

TYPICAL X-SECTION OF PROPOSED PROTECTION WORK BETWEEN RD 330.00 TO 350.00M

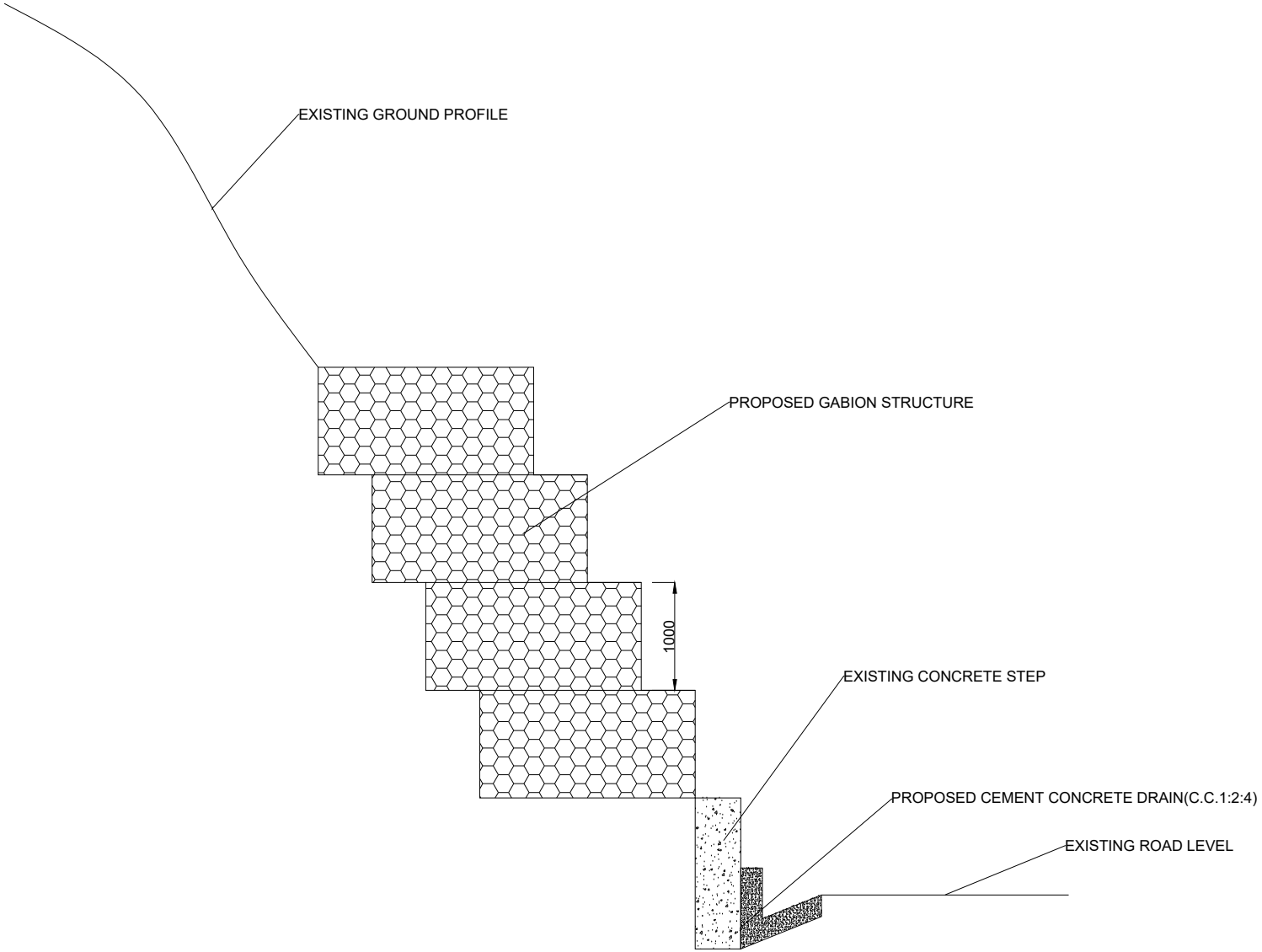

TYPICAL X-SECTION OF PROPOSED PROTECTION WORK BETWEEN RD 488.00 TO 528.00M

एसजेवीएन लिमिटेड SJVN Limited
(भारत सरकार तथा हिमाचल प्रदेश सरकार का सांझा उपक्रम)
(Navratna CPSE)
(नाथपा झाकड़ी जल विद्युत स्टेशन 1500MW)
प्रापण एवं संविदा विभाग, झाकड़ी, जिला शिमला, हि॰ प्र॰-. 172201
http://www.sjvn.nic.in
जी एस टी संख्या (GST No.) 02AAICS1307F1ZY
सिन् संख्या (CIN No.) L40101HP1988GOI008409

NOTICE INVITING E -TENDER (NIT)

SJVN Ltd. invites Tenders on E-mode from the eligible Contractors **(Except JV/Consortium)** registered with States/Central Govt. Agencies /PSU's / Autonomous bodies, for the following work: **-**

1.	**Name of Work:**	**"Repair/Strengthening of Approach Road from Steel Bridge to Dam Top on Right Bank (RD 0.00 m to 1500.00 m) at NJHPS Nathpa".**
1.1	**Tender No**	**PCD-2977(Civil)/2026**
2.1	**Time for Completion**	**06 Months**
2.2	**Estimated Cost**	**₹ 1,36,70,959/- (Exclusive of GST)**
3.1	**Cost of Tender Document* (Nonrefundable) –** *To be credited in SJVN's account before last date and time for availability/downloading of the Tender document, by the bidder as per procedure for payment laid down here-under.*	Rs. 5900/-(Rs. 5000/- +GST @18% i.e. Rs. 900/-)
3.2	**Date and time for availability of Tender document on website https://etender.sjvn.co.in**	Any time between (Date and Time) **04 /08/2026 (20:00 Hrs.) to 26/08/2026 (12:00 Hrs.)**
3.3	**Earnest Money Deposit*-** ***To be paid as per procedure laid down here-in-under.***	**Rs. 273419/-**
4.	**Time, Date and Place of Pre-bid Meeting**	NA
5.	**Deadline for uploading of Technical as well as Financial Bid on SJVN's E-tender Portal : https://etender.sjvn.co.in and submission of documents in physical form**	i. For online submission Date: 27/08/2026 Time 13:00 Hrs ii. For documents in physical form Date: 06/09/2026 Time 13:00 Hrs

		(The time limit for submission of documents in physical form shall be ten (10) days after the deadline for submission of e bids).
6.	**Time and Date of opening Technical Bid(s)**	Date 27/08/2026 Time **14:00 Hrs**
7.	**Time and Date of opening Financial Bid(s)**	The date of opening of Financial bid will be informed separately to the bidders whose Technical bid will be found responsive.
8.	**Place of opening Bid(s)**	O/o HOD (P&C), NJHPS, SJVN Ltd. Jhakri
9.	**Authority/Officer inviting Tender**	HOD (P&C), NJHPS, SJVN Ltd. Jhakri , Tehsil Rampur Bsr., Distt. Shimla (HP)-172201 E-mail: rajeshkr.negi@sjvn.nic.in

Note: Being civil work tender MSEs/NSIC/Startup India registered firms are not exempted from the deposition of Cost of Tender Document & Earnest Money Deposit/Bid Security.

1. **PROCEDURE/Mode FOR PAYMENT: (For cost of Tender Document and EMD)**

Cost of Bid Document and Earnest Money deposit (EMD/ Bid Security)

1.1 The cost for purchase of bid document is **₹ 5,900- (Rupees Five thousand Nine hundred only) (Non-refundable) i.e. (₹ 5,000/-+GST @18% i.e. ₹900/-).**(To be credited in SJVN's account before last date and time for availability/downloading of the Tender document, by the bidder as per procedure for payment laid down here-under.)

1.2 EMD/Bid Security: The bidder shall furnish, a bid security/ earnest money as part of the bid amounting to **₹ 273419/- (Rupees Two Lakh Seventy Three Thousand Four Hundred Nineteen Only) . This EMD/ Bid security is to be submitted through online or FDR/TDR/BG as mentioned at 1.4 below.**

1.3 The **"Cost of Bid document"** & **"Earnest Money Deposit (EMD)"** shall be submitted / deposited through online payment gateway on SRM Portal/e-tendering portal.

Caution: In the event of funds remitted to wrong beneficiary account number, **SJVN Limited** or its Bank or its service provider would not responsible for the same.

1.4 FDR/TDR/BG: Please note that EMD (Earnest Money Deposit)/ Bid Security in the form of **FDR/TDR (Pledged in favour of the NJHPS, SJVN Limited)/BG (as per SJVN standard Document)** is also acceptable. The EMD (Earnest Money Deposit)/ Bid Security in the form of **FDR/TDR/BG** shall have to be submitted by the deadline of submission of physical documents indicated below at Sr. No. 8 (A) (a) (I, II & III) in a sealed envelope through post / courier or by hand on the address of HOD (P&C), NJHPS, SJVN Ltd., Jhakri, Tehsil Rampur Bsr., Distt. Shimla (HP)-

172201, failing which the bid shall be considered as non-responsive & financial bid will not be opened.

Remarks:- The EMD submitted in the form of DDs, local Cheque/ outstations Cheque will not be considered.

1.5 Bid security shall remain valid for a period of 45 days beyond the original bid validity period and beyond any extension subsequently requested. Any correction, alteration and addition in computer generated / other hand written instrument subsequently needs to attested by the appropriate authority of bank.

1.6 Being Civil work tender MSEs/NSIC/Startup India registered firms are not exempted from the submission of Cost of Tender Document & Earnest Money Deposit/Bid Security.

1.7 EMD of the bidder shall be forfeited/necessary action may be taken as per bid security declaration, if the bidder withdraws or amends its bids or impairs or derogates from the bid in any respect with in the period of validity of the bid. ***The EMD of the successful bidder shall be retained as contract security until such period the contractor furnishes the required security deposit and shall be released within 30 days from the receipt of the performance security & verification/confirmation thereof***. If the contractor is failed to fulfill his obligations, the EMD, retained as contract security shall be forfeited/necessary action may be taken as per bid security declaration submitted by the firm along with their bid.

1.8 The bid securities/EMD of unsuccessful bidders shall be returned within thirty (30) days after the declaration of result of 1st stage i.e technical evaluation.

1.9 <u>EMD of bidder(s) will be refunded only to designated account submitted by the bidder at the time of registration with SJVN irrespective of mode of payments made.</u>

1.10 No interest shall be payable by the SJVN on EMD.

1.11 Tender without cost of document & Bid security/EMD will be rejected.

1.12 The bid security/ EMD and bid security exemption certificates shall remain valid for a period of 45 days beyond the original bid validity period and any extension subsequently requested. If the Bid security/ Exemption certificate is not found valid for 45 days beyond the original bid validity period and any extension subsequently requested, SJVN may ask the bidder to extend the validity of the Bid security/ Exemption certificate for a period up to 45 days beyond the original validity period and any extension subsequently requested or else submit the EMD/ Bid security. Such EMD/ bid security shall be sent as per clause no. 1.4 & 1.6 as above and the same should submitted within ten (10) days from the date of SJVN's clarification.

1.13 In case EMD is submitted by way of Bank Guarantee; while issuing the physical BGs, the Supplier's/contractor's Bank shall also send electronic message through secure SFMS to Employer's/Buyer's Beneficiary Bank whose details are provided as below.

Beneficiary Name:	SJVN LTD O AND M ACCOUNT, Payable at SBI Jhakri

Account No:	11543142129
IFSC Code:	SBIN0006988
Bank Branch:	SBI Jhakri

2. Tender document consisting of qualification information and eligibility criterion of Tenders, plans, specification, drawings, the bill of quantities of work to be done and the set of terms and conditions of contract will neither be issued manually nor be sent by post or courier; the same can be viewed and downloaded by the registered bidders only on SJVN's E-Tender portal **https://etender.sjvn.co.in**

3. **To qualify for award of the Contract each bidder should have**;

A) The Bidder must have an average annual turnover of **₹ 41,01,288/- (₹ Forty One Lakh One Thousand Two Hundred Eighty Eight only)** during last three years ending 31st March of previous financial year.

Remarks: -

i) Annual financial turnover should be supported by Annual Report for Financial Standing (Balance Sheet and Profit & Loss Account) of last three (03) years ending **31/03/2026**. In case the "Annual Report for Financial Standing / Final Turnover" of previous financial year **2025-26** is not finalized till the submission of bid, the provisional financial turnover for the year ending **31/3/2026** should be submitted by the bidder duly authenticated/audited by the concerned statutory auditor or an authorized practicing Chartered Accountant or an authorized firm of Chartered Accountants, as applicable.

ii) CA certificate is also acceptable if "Annual Report for Financial Standing" is not applicable to the bidder as per applicable Act(s)/Rule(s).

iii) Annual Report/CA certificate should be authenticated with UDIN.

iv) Further any shortfall of document(s) for already submitted details/information for "Turn Over" along with the bid can be asked; however no such document(s) shall be asked if no details/information regarding the "Turn Over" is provided in the bid submitted by bidder(s).

B) **Proven/Technical Experience**:

To qualify for award of the Contract, the Bidder as sole Contractor or partner of Joint venture or sub-contractor approved by the employer should have experience of executing at least one similar work of value not less than **₹ 68,35,480/- (Rupees Sixty Eight Lakh Thirty Five Thousand Four Hundred Eighty only)** in preceding Seven (07) years.

Similar work means work related to " ***Civil works , which involves the execution of most of the items related to the BOQ of this work or higher specifications***"

i) The period of seven years as above shall be reckoned from the date of issue of NIT i.e from the date of uploading of tender on website(s)

ii) In case of ongoing works contract, the value of completed work done shall be considered for the purpose of qualifying criteria.

Note:- In support of the similar work experience the bidder shall submit the following: -

i) The bidder must have to submit/upload documentary proof of the work experience along with copies of the B.O.Q. of the executed work. In case documentary proof of work experience is issued by private company (ies) /firm (s), then copy (ies) of TDS for the same work are also needs to be submitted by the bidder.

ii) Further any short full documents i.e LOA/BOQ/Completion certificate/TDS etc. for the already submitted "work experience" along with bid can be sought. However, NO new work experience/LOA/ Contract shall be asked during the evaluation of bids.

Remarks:- Being civil work tender MSEs/NSIC/Startup India registered firms are not relaxed from the condition of Prior Financial turnover and prior work done experience. MSE's/NSIC/Startup India registered firms have to submit/upload financial turnover and work done experience certificate of similar work fulfill independently as per Qualifying criteria of tender considering critical work related to safety of plant.

C) GENERAL CONDITIONS OF QUALIFICATIONS:

a) SJVN reserves the right to cancel / withdraw the invitation for bid without assigning any reason and shall bear no liability whatsoever consequent upon such a decision.

b) Notwithstanding anything stated above, SJVN reserves the right to assess the Bidder's capability and capacity to perform the contract satisfactorily, should the circumstances warrant such assessment in the overall interest of SJVN.

c) The above-mentioned requirements are minimum and the SJVN Ltd. reserves the right to ask for any additional information.

4. Downloading Tender Document

Bidder to access **https://etender.sjvn.co.in** to download NIT document, after completing registration formality (if required) and successful login vendor need to process for Tender Fee/ Document Fee as per the provisions of bid documents and thereafter bidder can download detailed tender document**.**

5. Bid Submission:

I. Bidder needs to login on SJVN tendering portal i.e. **https://etender.sjvn.co.in**

II. Search tender by filling necessary searching criteria after Login.

III. Please refer to attached document of "Bidder User manual".

Bidder(s) are also advised to keep on visiting the websites as mentioned below for any Notification/ Amendment / Addendum/ Corrigendum from SJVN's side in respect of this tender: -

(i) **https://etender.sjvn.co.in**

(ii) **www.sjvn.nic.in**

(iii) **www.eprocure.gov.in**

To give prospective bidders reasonable time in which to take an addendum into account in preparing their bids, the Employer shall extend, as necessary, the deadline for submission of bids.

6. **DIGITAL SIGNATURES**: The bidder should also have the Digital Signatures **(Class II or higher with signing & encryption both)** which are mandatory for security purpose. The digital signatures can be obtained from any of the authorized agencies in India as per IT Act.2000. Valid Digital Certificate must be installed in a computer system from where you want to login on website

Bidders shall be required to arrange all resources, including Digital Signature and Internet Connections at their own cost, for participating in online tenders/ bids at SJVN's E-tender portal.

7. All the bidders are requested to get themselves registered well in advance and no extra time will be considered for the delay in on-line Vendor Registration, if any. In case bidders wait till the last moment for registration/uploading of Bids, and if any technical problem is encountered at that time and the closing time may elapse, SJVN Ltd. shall not be responsible in any manner for such delay/ or any other reason thereof.

8. SUBMISSION OF BID(S):

(A) The tender shall be comprising of two parts in the following manner:

(a) Techno-Commercial Bid:

Part-I – Techno-Commercial Bid comprises of following documents:

- **i) EMD/Bid Security**
- **ii) Cost of tender Document**
- **iii) Registration certificate as contractor (Except JV/ Consortium) for road, building and other civil works enlisted with HPPWD / CPWD / HPSEB / Public Undertakings / any other Govt./ Semi Govt. Organization**
- **iv) GST & PAN no.**
- **v) EPF Code No.(Working status Live Establishment)**
- **vi) Annexure-B (Tender Form)**
- **vii) Annexure-C (Undertaking for fraud prevention and detection policy) along with Annexure-II (Guidelines on banning of Business dealings)**
- **viii) Annexure-D (Local content)**
- **ix) Annexure-E (Form of Declaration)**
- **x) Annexure-G (Qualification requirements)**
- **xi) Annexure-H (Land Border)**
- **xii) Annexure-J (Bid Security Declaration)**
- **xiii) Schedule -1**
- **xiv) Schedule-2**
- **xv) Schedule-D**
- **xvi) Schedule-E**
- **xvii) Schedule-F**
- **xviii) Documents as per clause no. 03 above (Financial statements, experience certificates etc.)**

Note:- Also the bidder shall certify that the documents as uploaded by the bidder are as per original document. The bidder has to upload the scanned copy of original document along with his bid.

(I) The bid documents shall be uploaded electronically and submitted online along with scanned copies of all the requisite documents. Some of the documents viz. Bid Security, Power of Attorney (If applicable), etc. are required to be submitted in physical form also.

(II) The time limit for submission of documents required in physical form shall be ten (10) days after the deadline for submission of e-bids in respect of following documents:-

- **(i) Bid security/ EMD (If not received online)**
- **(ii) Any other documents required to be submitted in physical form in addition to above as per the requirement of particular tender.**

(III) ***The original documents in physical form submitted after the period as specified above at Sr. No. II shall not be entertained and such bids shall be treated as late bids. If the original documents in physical forms are found to be at variance than the scanned copies submitted earlier alongwith e-bids, the bids will be treated as non-responsive.***

(b) <u>Price bid</u> :

Part-II- Price bid i.e. schedule – I (B.O.Q.).
The price is to be filled in ONLINE Dynamic schedule. The price quoted by the bidder only in the dynamic schedule shall be considered for price bid evaluation.

9. The bids submitted by the bidders shall remain valid for acceptance for a period of one hundred eighty **(180) days** from the date of opening of bids. If any Bidder withdraws his bid before the said period or makes any modifications in the terms and conditions of the bid, the Employer shall forfeit the said Earnest Money.

10. The Intending Tenderer must have their GST No., PAN, EPF Code etc. and the bidders shall have to upload the same along with their Techno-Commercial bid.

11. Employer reserves the right to cancel the tendering process at any time before award of work.

12. For any assistance/ clarification for e–tendering registration, submission of bid through e-tendering/ procurement, bidder may contact the following person: -

i) Sh. Ranjan: Mobile No. 08580548817 ***(E-mail ID: etender.support@sjvn.nic.in"***

The above persons are to be contacted for help/ assistance related to e–tendering registration, submission of bid through e-tendering only.

For any other clarifications regarding the tender bidder may contact the following persons/ representatives of M/s SJVN:-

(i) Sh. Randei Rana :- (E-mail ID randei.rana@sjvn.nic.in)
(ii) Rajesh Kumar (E-mail ID: rajeshkr.negi@sjvn.nic.in).

13. The Helpline Nos. for providing Technical Support to Bidders for respective sites under the Link "**Helpline and Help Documents for Bidders"** are mentioned on the Portal itself.

14. All submissions/ correspondence /clarification to Tender Document and any other information, with regard to the above shall be made at the following Address:

Address: **HOD (P&C), NJHPS,**
SJVN Ltd. Jhakri, Tehsil Rampur Bsr.,
Distt. Shimla (HP)
e-mail:- rajeshkr.negi@sjvn.nic.in

विभागाध्यक्ष
प्रापण एवं संविदा विभाग,
एनजेएचपीएस, एसजेवीएन लि0
झाकडी–172201

TENDER FORM :- PCD-2977 (CIVIL)/2026 ANNEXURE-B

To
The HOD (P&C),
NJHPS, SJVN Ltd., Jhakri,
Tehsil Rampur Bsr., Distt. Shimla (HP)-172201

We have read and examined the following tender documents relating to **"Repair/Strengthening of Approach Road from Steel Bridge to Dam Top on Right Bank (RD 0.00 m to 1500.00 m) at NJHPS Nathpa " PCD-2977(Civil)/2026**

Volume-I
Sections
I Notice Inviting Tender
II Instructions to Bidders
III Tender Forms, Form of Declaration, Schedules, Integrity Pact **(Not applicable)** , Undertaking regarding Blacklisting
IV General Conditions of Contract and Contract Data
V Forms for Deeds of Guarantees and Proforma for Agreement
VI Special Terms and Conditions
VII Bill of Quantities

Volume-II
1 Scope of Work
2 Specifications
3 Safety Code
4 List of Approved Makes of Building Materials
5 Tender Drawings

1. We hereby tender for execution of the work referred to in the documents mentioned in paragraph one above upon the terms and conditions contained or referred to in the aforesaid documents and in accordance in all respects with the specifications, designs, drawings and other details given herein and at the rates contained in BOQ and within the period(s) of completion as given in Schedule-B and subject to such terms and conditions as stipulated in the enclosed tender documents.
2. We agree to keep this tender open for acceptance for **180 days** from the date of opening of bids and also agree not to make any modifications in its terms and conditions on our own accord.
3. **A sum of Rs. 273419 /- (Rupees Two Lakh Seventy Three Thousand Four Hundred Nineteen only) as Earnest Money** has been paid as per the procedure mentioned in Section-I of Tender Document or is hereby enclosed as scanned copy of FDR/TDR pledged to SJVN . In case of FDR/TDR, the original of same shall be submitted as per deadline specified in NIT.

We agree that if we fail to keep the validity of tender open, as aforesaid, or make any modification in the terms and conditions of our tender on our own accord and/or fail to commence the execution of the works as provided in the documents referred to in paragraph-1 above, after the acceptance of our tender, we shall become liable for forfeiture of our earnest money, as aforesaid, and the Employer shall without prejudice to any other right or remedy, be at liberty to forfeit the said earnest money absolutely / necessary action may be taken as per bid security declaration submitted by the firm along with their bid. Should this tender be accepted, we agree to abide by and fulfil all the terms and conditions and provisions of the above mentioned tender documents.

We certify that the Tender submitted by us is strictly in accordance with the terms, conditions, specifications etc. as contained in your Tender Documents, referred to in paragraph-1 above, and it does not contain any deviations to the aforesaid documents. It is further certified that information furnished in the Tender submitted by us correct to the best of our knowledge and belief.

(Signature of person duly authorised to sign the Tender on behalf of the bidder alongwith Seal of Company)

Witness:

Name_____

Signature_____ Designation_____

Date_____ Name of Company_____

Name & Address_____
_____
_____ Date: _____

Postal Address_____ _____

Telegraphic Address:_____ _____

Annexure-"C"

PCD-2977(Civil)2026

Undertaking

I/We, M/s.....(Name of Bidder) hereby certify that I/We would adhere to the fraud prevention and detection policy of SJVN and not indulge myself/ourselves or allow anybody else working in our organization to indulge in fraudulent activities and would immediately apprise the SJVN authorities regarding the fraud/suspected fraud as soon as it comes to my/our notice.

Date: **For and on behalf of the bidder**

.....

(Seal & signature of the Bidder)

ANNEXURE-"D"

(Format for Undertaking of Self certification regarding Local Content In line with PPP-M II order, 2017 & Revision PPP-M II order, 2017 dated 16/09/2020, 28/07/2020 & if applicable, to be provided on a **company letterhead by authorized person**)

Tender of Description: PCD-2977(Civil)/2026- "Repair/Strengthening of Approach Road from Steel Bridge to Dam Top on Right Bank (RD 0.00 m to 1500.00 m) at NJHPS Nathpa"

Bidder's Name and Address (Bidder) :
Name:

To:
HOD (Procurement and Contract Deptt.)
NJHPS, SJVN Ltd. Jhakri
Distt. Shimla HP 172201

Dear Sir,
Format for Self-certification regarding Local Content in line with PPP-M II order, 2017 and Revision PPP-M II 2017 date 04/06/2020 & 28/07/2020 if applicable, to be provided on company letterhead by the authorized person.
Date: -
I_____S/o,D/o,W/o_____
_____
Resident of_____here by solemnly affirm and declare as under:-
That I will agree to abide by the terms and conditions of the Public Procurement (Preference to Make in India) Order, 2017 (hereinafter PPP-M II order) of Government of India issued vide Notification No:P-45021/2/2017-BE-II dated 15/06/2017, its revision dated 04/06/2020, Notification No. P-45021/2/2017-PP(BE-II)-part(4) Vol.II date 19/07/2024 & in MOP Letter Public procurement (Preference to make in India) to provide for purchase preference (linked with local content) in respect of Hydro Power Sector Order 28/07/2020, and any subsequent modifications/ Amendments, if any the information furnished hereinafter is correct to the best of my knowledge and belief and I undertake to produce relevant records before the procuring entity/ SJVN Ltd or any other Government authority for the purpose of assessing the local content of goods/services/works supplied by me for …….…… **(Enter the name of the Tender).**
That the local content for all inputs which constitute the said goods/ services/works has been verified by me and I am responsible for the correctness of the claims made therein. That the goods/ services/works supplied by me for ---------- **(Enter the name of the Tender)** meet the 'Minimum Local Content' as defined in the PPP-M II order and MoP order 28/07/20 and value of local content (in…… **%**).
That the value addition for the purpose of meeting the 'Local Content 'has been made by me at ..... {**Enter the details of the location(s) at which value addition is made**}.

We ensured that the imported items sourced locally from resellers/distributors are excluded from the calculation of local content. Details of the cost of locally sourced imported items (inclusive of taxes) along with the breakup on license/royalties paid/technical expertise cost etc. sourced from outside India are as under:-

i. Cost of locally sourced imported items (inclusive of taxes) in **Rs**……..

ii. Cost of license/royalties paid outside India in **Rs**……..

iii. Cost of technical expertise cost etc. sourced from outside India in **Rs**……..

That in the event of the local content of the goods/ services/works mentioned herein is found to be

incorrect and not meeting the prescribed Local Content criteria, based on the assessment of procuring agency (ies)/ SJVN Ltd/Government Authorities for the purpose of assessing the local content, action shall be taken against me in line with the Revision PPP-MII order dated 04/06/2020and MOP order dated 28/07/2020 and provisions of the Bidding Documents.

I agree to maintain the following information in the Company's record and shall make this available for verification to any statutory authority. **Further, Self-declarations/ auditor's/ account's certificates submitted by the manufacturer/ supplier may be verified randomly by the committee constituted as per MoP order 28-07.2020. In case of false documents/misrepresentation of the facts requisite action against such manufacturer/supplier will be taken based on the recommendation of the Committee**."

i Name and details of the Local Supplier
(Registered Office, Manufacturing unit location, nature of legal entity)
ii. Date on which this certificate is issued
ii. Goods/services/works for which the certificate is produced
For and on behalf of.....(**Name of firm/entity**).

Authorized signatory (To be duly authorized by the Board of Directors)
Name:-
Designation:-
Contact No.
Date :

ANNEX-E

FORM OF DECLARATION (Part of Technical Bid) {PCD-2977 (Civil)/2026}

M/s----------(name of Bidder) having its registered office at ----------(hereinafter referred to as the Bidder')

having carefully studied all the Tender documents, specifications, drawings, etc. pertaining to the Work for **"Repair/Strengthening of Approach Road from Steel Bridge to Dam Top on Right Bank (RD 0.00 m to 1500.00 m) at NJHPS Nathpa "** the local and site conditions and having undertaken to execute the said works.

DO HEREBY DECLARE THAT:

1. The Bidder is familiar with all the requirements of the Contract.

2. The Bidder has not been influenced by any statement or promise of any person of the Employer but only the Contract Documents.

3. The Bidder is financially solvent.

4. The Bidder is experienced and competent to perform the Contract to the satisfaction of Employer.

5. The Bidder is familiar with all general and special laws, acts, ordinances, rules and regulations of the Municipalities, District, State and Central Government of India that may affect the work, its performance or personnel employed therein.

6. The Bidder undertakes to abide by all labour welfare legislations.

7. The Bidder undertakes that the information furnished in the Bid is true and correct in all respects.

8. The Bidder undertakes that all the documents uploaded along with the NIT have been read and there is no deviation from the standard terms and conditions of the tender document including Corrigendum/Addendum (if any).

Date: **For and on behalf of the bidder**

…….

(Signature of authorized representative of the Bidder, along with his name, Seal of Company)

(PCD-2977(Civil)/2026)		ANNEXURE-F
Registration details of Corporate Offfce, Shimla (Principle Place of Business)		
Sr. No.	**Data Particular**	**Data**
1	Supplier/ Reccipient name	SJVN Limited
2	Type of supplier/ Reccipient (for B2B Suppliers)	Registered/ unregistered, Composite/ Foreign/ Casual/ Consumer (Strike out which is not applicable)
3	ARN No.	AA020317004466N
	Prov. GSTIN/GSTIN (for B2B Suppliers)	02AAICS1307F1ZY
4	Address of registered place of Business of the Suppliers under GST along with State code and PIN code (for B2B Suppliers) which is also the location of the business of SJVN Ltd.	SJVN Ltd., Corporate Office Complex, Shakti Sadan, Shanan, Shimla (HP)-171006 State Code-02
5	PAN	AAICS1307F
6	TAN	PTLS13839A
7	UID No. in case of Embassy/UN	Not applicable
8	Status of suppliers i.e. whether SEZ, EOU, DTA, Government, Local Authority	Not Applicable
9	Name & Designation of Contact Person	Sh. BR Sethi, Chief General Manager (F&A)
10	Email Address	Corporate.finance@sjvn.nic.in
12	Phone No.	0177-2660233

Annexure-G

Qualification Requirement (Part of Technical Bid) PCD-2977(Civil)/2026

Notes on Form of Qualification Information

The information to be filled in by bidders in the following pages will be used for purposes of qualification as provided for in Clause 3 of the Instructions to Bidders (ITB). This information will not be incorporated in the Contract. Attach additional pages as necessary.

1. Individual Bidders

1.1	Constitution or legal status of Bidder [attach copy] Place of registration:		
	Principal place of business		
	Power of attorney or any other legally valid document with regard to authenticity of signatory of Bid		
1.2	Average Annual Financial Turnover (as per clause 3.3 of ITB) **(i.e. ₹ 41,01,288)**	**Financial Year (Turnover Rs. In lakhs)**	
		2023-24	
		2024-25	
		2025-26	
1.3	a) PAN No. [attach copy]		
	b) GST No. (attach copy)		
1.4	**The bidder as sole contractor or partner of a Joint venture or sub-contractor approved by the employer should have experience of executing at least one similar work of value not less than ₹ 68,35,480/- in the preceding 07 years. Experience certificate and work order from employer should be submitted alongwith the bid to substantiate the experience in all cases. In case evidence of work experience against QR is issued by non-governmental organization; copy (ies) of the TDS for the same contract is required to be submitted by the bidder.** **[To be filled in by the bidder]**		

Project Name	Name of employer/client	Description of work	Value of contract	contract No.	Date of issue of work order	Stipulated date of completion	Actual date of completion	Remarks explaining reasons for delay if any

1.5 Duly certified Financial reports for the last three Financial years ending 31.03.2026 i.e. balance sheets, profit and loss statements etc. (attach copies).

1.6 The proposed methodology and program of construction, backed with equipment and material planning and deployment, duly supported with broad calculations , justifying their capability of execution and completion of the work as per technical specifications and within the stipulated period of completion in pursuant to Clause 3.2 of the ITB.

Annexure-H

UNDERTAKING {PCD-2977(CIVIL)/2026}

(In compliance of Ministry of Finance, Government of India order no F. No. 6/18/2019-PPD dated 23.07.2020)

I have read the clause regarding restrictions on procurement from a bidder of a country which shares a land border with India.

I certify that ……..……..(name of Bidder) is not from such a country or, if from such a country, has been registered with the Competent Authority. I hereby certify that ……..……..(name of Bidder) fulfills all requirements in this regard and is eligible to be considered.

Note:- Evidence of valid registration by the Competent Authority shall be attached (if applicable)

Place:

Date:

(Signature)

Annexure-J

Bid Security Declaration

Tender No: SJVN/NJHPS/P&C/PCD-2977(Civil)/2026 **Date:**

To

Head of Department,
Procurement and Contract Deptt.
NJHPS, SJVN Ltd. Jhakri,
Distt. Shimla-H.P.-172201.

I hereby submit a declaration that the bid submitted by the undersigned, on behalf of the bidder_____(Name of the bidder) shall not be withdrawn or varied during the period of bid validity as stipulated in Bid Document.

I, on behalf of the bidder _____(Name of the Bidder), also accept the fact that in case the bid is withdrawn or varied any term & condition in regard hereto during the period of bid validity , except as provided in Bid Document or in the case of a successful bidder ,if we fail within the specific time limit to sign the agreement or we fail to furnish the required performance security as provided in **Clause 3 of General Condition of Contract** of Bid Document or if we adopt the corrupt or coercive or fraudulent practices covered under **Clause 31 of Instruction to Bidder (Section-II)** of Bid Document, then _____ (Name of the Bidder) will be suspended for participation in the tendering process for the work of SJVN Ltd. and its subsidiaries, works of SJVN Foundation and work under other centrally sponsored schemes, for a period of one year from the date of issue of notice of such suspension by the Employer.

Date: (Signature of Authorised Signatory)*
Place: (Name)……..…
(Designation)……...
(Common Seal)……

In case of a Sole Bidder, Bid Security Declaration should be on the letterhead of the Bidder and should be signed by a person competent and having the Power of Attorney to bind the Bidder.

Name of work : " Repair/Strengthening of Approach Road from Steel Bridge to Dam Top on Right Bank (RD 0.00 m to 1500.00 m) at NJHPS Nathpa". (PCD-2977(Civil)/2026)	**Schedule-1**

SJVN Ltd.

NJHP Station (1500 MW)

"General Information & Bank Account Detail"

Techno-commercial bid part

The Following is the general information regarding Contact Person, Contact Detail and Phone/ Fax Nos. and Bank Account Detail for **" Repair/Strengthening of Approach Road from Steel Bridge to Dam Top on Right Bank (RD 0.00 m to 1500.00 m) at NJHPS Nathpa". PCD-2977(Civil)/2026)** - if the order is awarded then the payment is to be released through RTGS as per the following detail:

Sl. No.	Description	Detail
1	**Bidder's Name & Complete Address With Postal Code**	
2	**Bid reference No.**	
3	**Contact Persons**	
	Date of Birth of Contact Person	
4	**Contact Numbers**	
5	**Fax No.**	
6	**Website if any**	
7	**e-mail id**	
8	**Bank Account Details (For release of payment / EMD through NEFT/RTGS)**	
(i)	**Name of the Beneficiary (Exactly same as mentioned in the Bank Account)**	
(ii)	**Name of the Bank**	
(iii)	**Name of Branch**	
(iv)	**IFSC Code No.**	
(v)	**Bank Account Number**	
9	**PAN No.**	
10	**GST No.**	
11	**Registration No.**	
12	**EPF No.**	
13	**whether Micro/small Enterprises**	
14	**Whether Micro/small Enterprises owned by SC/ST/Woman**	
15	**Type of Category of Micro/ small Enterprises (General/ SC/ST)**	
Date :		
Place :		

Schedule-2

SJVN Limited

(6X250MW Nathpa Jhakri Hydro Power Station)

Name of Work: "Repair/Strengthening of Approach Road from Steel Bridge to Dam Top on Right Bank (RD 0.00 m to 1500.00 m) at NJHPS Nathpa" PCD-2977(Civil)/2026

Bidder's Name & Address :	To
	Dy. General Manager, Procurement & Contract Deptt. NJHPS, SJVN Ltd. , Jhakri.

Sr.No.	Description of document	Reference No. / Certificate No.	Relevant detail.
1	**Financial Turnover as per NIT**		
(a)	F.Y.-2023-24		
(b)	F.Y.-2024-25		
(c)	F.Y.2025-26		
2	**Work Experience as per NIT.**		
(a)			
(b)			
(c)			

SCHEDULE –D (part of technical bid) PCD-2977(Civil)/2026

CONSTRUCTION PLANT, EQUIPMENT & MACHINERY AND ITS PLANNING SCHEDULE [To be filled in by the Bidder]

Sl. No.	Name of Equipment	Make & Model	Capacity	Total No. of equipments	Source /sources of Mobilisation	Year of Purchase	Whether New /Old	Hours run	No. of overhauling already done	Proposed deployment for the work month wise phasing in accordance with constn. Schedule	Remarks
1	2	3	4	5	6	7	8	9	10	11	12

Note

1) The above schedule will be supplemented from time to time to achieve the required targets and as per directions of Engineer-in-charge.

2) Under the head "source/sources of mobilisation", the Contractor would clearly indicate the source(s) of equipment and the time when it could be released from his existing works (s) / contract (s) for work (s) / contract (s) in question For the new equipments the Contractor would indicate the source of purchase and the likely delivery after placement of order.

SCHEDULE - E (Part of technical bid) PCD-2977(Civil)/2026

LIST OF PLANT, MACHINERY & EQUIPMENT IMMEDIATELY AVAILABLE WITH THE CONTRACTOR FOR DEPLOYMENT ON THE WORKS
[To be filled in by the Bidder]

Sl. No.	Name of Machinery	Quantity	Description, size, capacity, model etc.	Condition	Year of Service	Present location

SCHEDULE – F, PCD-2977(Civil)/2026

CONSTRUCTION METHODS

[To be filled in by the Bidder]

The Bidder shall submit the proposed methodology and program of construction, backed with equipment and material planning and deployment, duly supported with broad calculations, justifying their capability of execution and completion of the work as per technical specifications and within the stipulated period of completion.

Annexure-K

1) The contractor should be asked to apply for photo gate pass to all the labourers who are engaging for work with their full residential address as per Form-B.
2) The Character and Antecedents of all the labours are required to be verified through their respective local Police as per address in AADHAR Card, 10 days before start of work.
3) The Labour of Nepal, Bangladesh, J &K and Tibet origin are required to be registered in the local Police stations before engaging by the contractor for work and their finger impression and photographs are required to be recorded in the local Police Station.
4) The Labour will not use a Dangri, Army / Police force uniform colour while Work in the project site(s).

Annexure-II

Guidelines on Banning of Business Dealings {PCD-2977)(CIVIL/2026}

Guidelines on Debarment of Business Dealings for SJVN Limited (including its Subsidiaries and Joint Ventures)

1.0 Introduction

SJVN (including its subsidiaries, and joint ventures) deal with various bidders, contractors, suppliers, consultants, and service providers, who are expected to adopt ethics of highest standards and a very high degree of integrity, commitments and sincerity towards the work undertaken. It is not in the interest of SJVN to deal with Agencies who commit deception, fraud or other misconduct in the tendering process.

These Guidelines are issued with a view to ensuring transparency, integrity, and fairness in public procurement undertaken by **SJVN Limited,** its Subsidiaries and Joint ventures.

These guidelines are framed in alignment with the 'Guidelines on Debarment of firms from Bidding' issued by the **Department of Expenditure, Ministry of Finance, Government of India.**

2.0 Scope

These Guidelines shall apply to all procurements financed, executed, or managed by SJVN, its Projects, Power Stations, Regional Offices, Liaison Offices including its subsidiaries, and joint ventures, and shall be binding upon all categories of bidders, contractors, suppliers, consultants, and service providers dealing with SJVN or its associated entities.

3.0 Definitions

a) **SJVN** means SJVN Ltd., its Projects, Power Stations, Regional Offices, Liaison Offices including its subsidiaries, and joint ventures.

b) **Debarment** means disqualification of a bidder from participation in any procurement process undertaken by SJVN for a specified period in accordance with Rule 151 of GFR 2017.

For the purposes of these Guidelines, the expressions *banning of firm, suspension,* and *blacklisting* shall convey the same meaning as *debarment.*

c) **Firm:** The term 'Firm' or 'Bidder' has the same meaning for the purpose of these guidelines, which includes an individual or person, a company, a co-operative society, a Hindu undivided family, and any association or body of persons, whether incorporated or not, engaged in trade or business.

d) **Allied Firm** means any concern within the sphere of effective influence of a debarred firm. In determining such influence, the following factors shall be considered—

(i) whether the management is common;

(ii) whether majority interest in the management is held by the partners or directors of the debarred firm;

(iii) whether substantial or majority shares are owned by the debarred firm and, by virtue thereof, it has a controlling voice;

(iv) whether the firm directly or indirectly controls, or is controlled by, or is under common control with another bidder; and

(v) all successor firms shall also be treated as allied firms.

e) Unit shall mean the Project/ Power Station/ Regional Office/ Liaison Office/Subsidiary/JV, as the context requires.

4.0 Authorities and Jurisdiction

(a) SJVN-level Debarment.

Competent Authority: Functional Director, SJVN. In case of subsidiaries, the Competent Authority shall be CEO.

Appellate Authority: Chairman & Managing Director (CMD), SJVN. In case of subsidiaries, the Appellate Authority shall be Chairman of the subsidiary.

(b) Ministry of Power (MoP)-level Debarment.

Debarment orders issued or endorsed by the Ministry of Power shall be governed by the Competent and Appellate Authorities as may be notified by the Ministry from time to time, and shall be binding on SJVN, its subsidiaries, and joint ventures for the period specified therein.

(c) Department of Expenditure (DoE)-level Debarment.

Debarment orders issued or endorsed by the Department of Expenditure, Ministry of Finance, Government of India, shall be governed by the Competent and Appellate Authorities specified by the said Department, and shall be binding on SJVN, its subsidiaries, and joint ventures for the period specified therein

5.0 Initiation of Debarment proceedings

During bidding: Action for banning of business dealings with any Firm shall be initiated by the department responsible for invitation of bids after noticing the irregularities or misconduct on the part of Firm concerned.

During execution: Action for banning of business dealings with any Firm shall be initiated by the respective department responsible for execution of works/services after noticing the irregularities or misconduct on the part of Firm concerned.

Besides the concerned department, Vigilance Department of each Unit/ Corporate Vigilance may also be competent to initiate such action.

6.0 Grounds for Debarment

Without prejudice to Rule 151 and Rule 175 of GFR 2017, a bidder or any of its successors may be debarred from participation in procurement undertaken by SJVN and its subsidiaries and JVs for any of the following reasons—

a) conviction under the *Prevention of Corruption Act, 1988,* the *Indian Penal Code* or Bhartiya Nyaya Sanhita, 2023*,* or any other law in force, for causing loss of life, damage to property, or threat to public health in the course of execution of a public procurement contract;
b) breach of the *Code of integrity* prescribed under Rule 175 of GFR 2017, including bribery, collusion, bid-rigging, anti-competitive conduct, false declaration, obstruction of investigation or audit, or undisclosed conflict of interest;
c) submission of false or forged information, misrepresentation, or concealment of material facts, resorting to corrupt or fraudulent practices;
d) persistent failure, default, or non-performance of contractual obligations;
e) supply of substandard material, non-supply of material, abandonment of works, sub-standard quality of works, or failure to abide by the Bid Securiñg Declaration etc.;
f) misuse of SJVN's premises or its facilities, forcefully occupies or damages SJVN's properties including land, water resources, forests / trees or tampers with documents/records etc.; and

g) Any other act or omission which, in the opinion of SJVN, warrants debarment in the interest of probity, fairness, and public interest.

7.0 Debarment Review Committee (DRC) and Procedure for Debarment

a) Constitution of DRC:

Prior to the initiation of debarment proceedings, the Competent Authority shall constitute a Debarment Review Committee (DRC) for examination of the case. The Committee shall comprise officers not below the rank of General Manager or Head of Department / Head of Project, as under—

- One officer from Contracts or Procurement of the concerned Unit or the Corporate Office;
- One officer from Finance (Corporate / Projects) of the concerned Unit or Corporate Finance;
- One officer from Corporate Law / Legal; and
- One officer representing the user or indenting department at the Corporate or Unit level, or the Head of Project / Engineer-in-Charge representing the concerned project site, as the case may be.

The officer belonging to the department initiating the proposal for debarment shall act as the Coordinator of the DRC and shall be responsible for convening meetings, facilitating examination of relevant records etc. The DRC shall submit its report to the Competent Authority.

b) Mandate and Process:

The DRC shall,

(i) examine all facts, records, and evidence pertaining to the case;

(ii) ensure that a show-cause notice has been issued and that a reasonable opportunity of representation, including personal hearing if sought, has been afforded;

(iii) assess the applicability to allied and successor firms; and

(iv) submit a reasoned and self-contained recommendation to the Competent Authority within eight (08) weeks, extendable with recorded justification.

c) Decision:

The DRC shall function in an advisory capacity. The final decision shall rest with the Competent Authority, who shall, after due consideration of the DRC's recommendation, issue a *speaking order* specifying the reason (in brief), scope, jurisdiction, and duration of debarment.

The entire proceeding shall, as far as practicable, be concluded within twelve (12) weeks from the date of initiation.

8.0 Period and Effect of Debarment

a) Maximum period — up to three (3) years for conviction-based cases under Rule 151(i) (DoE-wide), and up to two (2) years for breach of the Code of Integrity or performance-related grounds at the SJVN/MoP level.

b) Minimum period —ordinarily not less than six (6) months.

c) Commencement — the period of debarment shall commence from the date of issue of the debarment order by the issuing entity.

d) Contract Placement Bar — no contract of any kind shall be placed on a debarred firm, including its allied firms; this prohibition shall also apply in cases of risk purchase.

e) Bid/Contract Dates — only bids from firms that are not debarred on (i) the date of submission/opening of the tender and (ii) the date of issuance of Letter of Award/ Signing of Contract Agreement shall be considered.

f) Bids by Debarred Firms — if a debarred firm submits a bid, such bid shall be ignored. If such firm is the lowest (L-1), the next lowest eligible bidder shall be considered as L-1. Any bid security submitted by the debarred firm shall be returned.

g) Existing Contracts —contracts concluded prior to the issue of the debarment order shall not be affected.

h) Removal from approved/empanelled lists — the debarred firm shall also be removed from any approved/empanelled lists.

9.0 Applicability to Allied and Successor Firms

Debarment of a firm shall automatically extend to its allied and successor firms unless otherwise directed by the Competent Authority for reasons recorded in writing.

In the case of debarment of a joint venture or consortium, all partners shall stand debarred for the period specified in the debarment order, and the names of all such partners shall be explicitly mentioned in the order.

10.0 Jurisdiction and Recommendation of Debarment

a) **SJVN-Level Debarment:** for misconduct confined to SJVN or its subsidiaries/joint ventures, including non-performance, false declarations, or breach of integrity obligations.

b) **Recommendation to Ministry of Power (MoP):** for cases having sector-wide or systemic implications affecting multiple PSUs under the administrative control of MoP, or integrity breaches such as corruption, bribery, or cartelization in tenders of SJVN.

c) **Recommendation to Department of Expenditure (DoE):** for conviction-based cases or offences causing loss of life, property, or threat to public health, warranting Government-wide debarment under Rule 151.

Where such Government-wide debarment is warranted, the department responsible for initiation of debarment proceedings shall forward a self-contained proposal, along with complete supporting documentation, to the Ministry of Power for onward transmission to the Department of Expenditure, in accordance with the DoE OM.

11.0 Effect of Debarment by Other Authorities

SJVN shall give effect to debarment orders issued by the **Department of Expenditure (Ministry of Finance),** the **Ministry of Power,** or any other Government entity, where such orders expressly provide for applicability across Ministries, Departments, or PSUs.

Note (GeM). The Government e-Marketplace (GeM) may debar bidders for a period of up to two (2) years on its portal. SJVN shall honor such debarments for procurements undertaken on or through GeM, in accordance with GeM provisions.

12.0 Publication of Debarment Orders

Debarment orders issued by SJVN shall be displayed on SJVN's website and shall be binding upon all subsidiaries and joint ventures of SJVN. For the purpose, the concerned department shall forward the name and details of the Agency (ies) banned to IT&C Division of SJVN's Corporate Office for displaying the same on SJVN website. The details shall also be displayed on the respective subsidiary's website.

Debarment orders of the Ministry of Power shall be displayed on the Ministry's website, and those of the Department of Expenditure shall be displayed on the *Central Public Procurement Portal (CPPP)* maintained by DoE.

13.0 Appeal and Review (SJVN Level)

An aggrieved firm may prefer an appeal to the CMD, SJVN, within thirty (30) days from the date of communication of the SJVN-level debarment order.

The CMD may, after due consideration of the record and representation, uphold, modify, or set aside the order.

Appeal against MoP/DoE orders shall be dealt as per Guidelines on Debarment of firms from Bidding' issued by the **Department of Expenditure, Ministry of Finance, Government of India.**

14.0 Revocation and Reinstatement

(a) A debarment order shall stand automatically revoked upon expiry of the period specified therein; no separate order shall be required.

(b) For debarments issued by SJVN, the CMD, SJVN shall be the sole authority competent to review or revoke the order prior to its expiry, either *suo motu* or upon representation by the firm, based on new facts or sufficient justification.

Such revocation shall be issued by formal order and shall take effect from the date specified therein.

(c) For debarments issued by the Ministry of Power or the Department of Expenditure, revocation or modification prior to expiry shall rest exclusively with the respective issuing authority.

(d) Upon receipt of a revocation or modification order, the concerned department shall promptly update internal records and, where applicable, SJVN's website or the CPPP.

Note: In case of shortage of suppliers/contractors/service providers in a particular group, such debarments may also hurt the interest of procuring entities. In such cases, endeavour should be to pragmatically analyse the circumstances, try to reform the supplier and may get a written commitment from the suppliers / contractors / service providers that its performance will improve.

15.0 Record-Keeping and Reporting

All proceedings, communications, and decisions under these Guidelines shall be duly forwarded for record to Corporate Civil Contracts Deptt.

A consolidated list of firms debarred and reinstated at the SJVN level shall be maintained by Corporate Contracts Deptt. and published on SJVN's website.

Matters having inter-ministerial or sectoral implications, including those requiring consideration by the Department of Expenditure, Ministry of Finance, shall be reported to the **Ministry of Power** through the **Corporate Civil Contracts Department,** in accordance with the procedure prescribed under the DoE OM.

Form of Declaration of Eligibility

Undertaking

I/We, ……**[Name of the Bidder / Firm / Company],** having our registered office at **[……..],** do hereby certify that neither I/we nor any of our allied firms, successor entities, consortium / joint-venture partners (as applicable) are currently under debarment by SJVN Limited (including its subsidiaries/JVs), the Ministry of Power, Government of India, or the Department of Expenditure (DoE), Ministry of Finance, Government of India.

I/We fully understand that if this declaration/undertaking is found to be false or misleading, our Bid shall be liable for rejection and, if the Contract has been awarded, the same shall be liable for termination, in addition to any other action as may be taken under law.

Date. ……

Place……

(Name & Signature of Authorised Representative

With Seal/Stamp of Company)

Annexure-I

Special Additional Terms and Conditions of Contract -PCD-2977(Civil)/2026

1. Time is the essence of the contract and no hindrance shall be considerable unless intimated by the contractor within 24 hrs. from its occurrence.

2. During continuance of the Contract, the Contractor and his sub-Contractors shall abide at all times by all existing labour enactments and rules made there under, regulations, notifications and bye laws of State or Central Government or local authority and any other labour law (including rules), regulations, bye laws that may be passed or notification that may be issued under any labour law in future either by the State or the Central Government or the local authority. The Contractor shall keep the Employer indemnified in case any action is taken against the Employer by the competent authority on account of contravention by the Contractor of any of the provisions of any Act or rules made there under, regulations or notifications including amendments. If the Employer is caused to pay or reimburse, such amounts as may be necessary to cause or observe, or for non-observance of the provisions stipulated in the notifications/bye laws/acts/rules/regulations including amendments, if any, on the part of the Contractor, the Engineer/Employer shall also have right to recover from the Contractor any sum required or estimated to be required for making good the loss or damage suffered by the Employer.

The employees of the Contractor and his sub-Contractor in no case shall be treated as the employees of the Employer at any point of time.

Some of the major labour laws that are applicable to construction industry are given below.

(i) Workmen Compensation Act 1923 as amended by Amendment Act No.65 of 1976.
(ii) Payment of Gratuity Act 1972
(iii) Employees PF and Miscellaneous Provision Act 1952 including FPS- 71/EPS-95.
(iv) Maternity Benefit Act 1961 (Amended)
(v) Contract Labour (Regulation and Abolition) Act 1970 with Rules framed there under as amended.
(vi) Minimum Wages Act 1948 (Amended)
(vii) Payment of Wages Act 1936 (Amended)
(viii) Equal Remuneration Act 1979
(ix) Payment of Bonus Act 1965 and Amendment Act No.43 of 1977 and No.48 of 1978 and any amendments thereof.
(x) Industrial Disputes Act 1947(Amended)
(xi) Industrial Employment (Standing Orders) Act 1946 (Amended)
(xii) Trade Unions Act 1926
(xiii) Child Labour (Prohibition and Regulation) Act 1986
(xiv) Inter-State Migrant Workmen's (Regulation of Employment and Conditions of Service) Act 1979
(xv) The Building and Other Construction Workers (Regulation of Employment and Conditions of Service) Act 1996 and the Cess Act of 1996

(xvi) The Personal Injuries (Compensation Insurance) Act, 1963 and any modifications thereof and rules made there under from time to time.

3 **Contractor will have to produce W-Form/X-form (as applicable) for material to be utilized (such as stone, aggregate, sand etc.) for construction work under H.P Mineral Rules, 2015 (Prevention of illegal Mining, Transportation and Storages).**

4 **Recovery of serviceable stone:-** Serviceable stone shall be recovered minimum @ ₹ 1632/- Plus@18% GST of ₹ 294/-= ₹ 1926/- per cum **(if applicable).** If a tender is awarded higher than the estimated cost then the rate for recovery of stone (per cum) shall be increases in proportion.

5 It should be ensured that the following clauses of Indian Standard Code are complied with:

a) Clause 26.1 of IS 456: 2000, which states that "Reinforcing steel of same type and grade shall be used as main reinforcement in a structural member. However, simultaneous use of two different types of grades of steel for main and secondary reinforcement respectively is permissible".

b) Note given along with Clause 1.0 of SP-34 stating "Different types of reinforcing bars, such as plain bars and deformed bars of various grades, say Fe415 (N/mm2) and Fe50() (N/mm2), should not be used side by side as this practice will lead to confusion and error at site. However, secondary reinforcement such as ties and stirrups, may be of mild steel throughout even though the main steel may be of high strength deformed bars".

6 Owing to lower bond strength any grade of plain bars shall be avoided as reinforcement in RCC constructions.

7 Contractor should be instructed to plan the reinforcement steel requirements of various types grades sufficiently in advance and place his orders accordingly so that, appropriate types and grade are available at site when required and no such changes in grade or type are necessitated by non-availability of required reinforcement.

8 The type and grade of reinforcement steel should be specified clearly in design drawings. Appropriate notes should be given to avoid any ambiguity.

9 Quality control department at site should conduct checks to ensure that correct grade of reinforcement is being used at site. Regular audits should be conducted. Non-compliance, if any, observed by site quality control department, shall be reported immediately to concerned Corporate Deign department / Corporate Quality department.

10 Appropriate measures should be taken at site to ensure that different grades of steel are easily distinguished and do not get mixed up during, transportation, storage and placement.

11. The Contractor has to Comply the latest labor codes as per Govt. regulations. Further, Contractor shall also comply the labour Laws and it's time to time notification and amendments.

12. Royalty: -The Price Bid shall be inclusive of any Royalties or Seigniorage Fee or Cess or other charges payable on the Quarried or mined metal, minerals. (If applicable)

For & on behalf of SJVN Ltd.

Head of Department,
Procurement & Contract Deptt.,
NJHPS Jhakri, Distt. Shimla (HP).

INFORMATION & INSTRUCTIONS FOR BIDDER -PCD-2977(Civil)2026

1.0 SUBMISSION AND FILLING OF BIDS:

1.1 **Please note that bids in physical form shall not be entertained under any circumstances and are only to be submitted through e-tendering at https://etender.sjvn.co.in.**

1.2 **DIGITAL SIGNATURES:** To participate in an e-Tender, bidder need to have a valid Class-3 Digital Certificate (Signing & Encryption/Combo) from certifying authority of India as per the IT Act, 2000. Valid Digital Certificate must be installed in a computer system from where you want to login on website. Perform the below steps to confirm whether valid digital certificate is available on your computer system or not. Perform the below steps to confirm whether valid digital certificate is available on your computer system or not.

Steps:

- Open Internet Explorer.
- Select Tools menu from menu bar. OR (Press Alt + T on your keyboard).
- Click on Internet Options >>Content >>Certificate button.
  The bidder should view your digital certificate under "Personal" heading

  Requirement of Digital Signature Certificate

- Please enable **ActiveX Controls & Plug-ins. (Tools->Internet Options-> Security- >Custom Level)**

  Active-X controls need to be enabled in your Internet browser. In order to ensure this, please do the following:

a. In Menu Bar ---Click on Tools - Internet Options – Security – Click on Trusted Sites Icon – Click on Sites button.
Add 2 Website in Trusted Sites https://etender.sjvn.co.in

After that, click on

Tools menu of Internet explorer - Internet Options – Security – Click on Internet Icon.

After Click on Custom Level button –

From below ActiveX controls and plug-ins ---- Select below 5 Items to be enabled

1) Download signed ActiveX controls –select Prompt or Enable

2) Download unsigned ActiveX controls – select Prompt or Enable

3) Initialize and script ActiveX controls not marked as safe for scripting – select Prompt or Enable

4) Run ActiveX controls and plug-ins-select Enable

5) Script ActiveX controls marked safe for scripting – select Enable

After completed this above selection----Below option has available---**Reset custom settings---Reset To: Select low or medium ---Click on OK.**

Also, please check your system Date & Time it should be set as current date & time.

- Please disable or uninstall Third Party Toolbar / Add-ons from Browser.

1.3 **VENDOR RERGISTRATION PROCESS**: After obtaining digital signature as indicated above, the bidder is to register with SJVN e- tendering portal **https://etender.sjvn.co.in** to participate in the tendering process. Perform below mentioned steps to register yourself:

- Click on a "New Bidder Registration" link available on home page
- You need to furnish individual details as well as of company details in registration form
- After filling all mandatory fields, you need to click on "submit" button to complete registration process.
- On successful completion of registration, you will be prompted a message saying that "You have successfully registered on SJVN Limited's e-tender Portal"

Already valid registered vendors in SJVN systems with Vendor Id need not follow registration process and may contact support email:

1.4 **Down loading Bid Documents:** Bidder to access **https://etender.sjvn.co.in** to download NIT document, after completing registration formality (if required) and successful login vendor need to process for Tender Fee/ Document Fee as per the provisions of bid documents and thereafter bidder can download detailed tender document**.**

1.5 **Bid Submission:**

I. Bidder needs to login on SJVN tendering portal i.e. **https://etender.sjvn.co.in**

II. Search tender by filling necessary searching criteria after Login.

III. Please refer to attached document of "Bidder User manual".

All the bidders are requested to get themselves registered well in advance and no extra time will be considered for submission of bids for the delay in on-line Vendor Registration, if any.

Bidder(s) are also advised to keep on visiting the websites as mentioned below for any Notification/ Amendment / Addendum/ Corrigendum from SJVN's side in respect of this tender:

(i) **https://etender.sjvn.co.in.**

(ii) **www.sjvn.nic.in.**

(iii) **www.eprocure.gov.in**

1.6 **For any assistance/ clarification for e–tendering registration, submission of bid through e-tendering/ procurement, bidder may contact the following person**: -

1. Sh. Ranjan Kumar: Mobile no. 85805-48817 (E-mail ID: etender.support@sjvn.nic.in)

For any other clarifications regarding the tender bidder may contact the following persons/ representatives of M/s SJVN:-

(i) Smt Randei Rana (E-mail ID: Randei.rana@sjvn.nic.in)

(ii) Rajesh Kumar (E-mail ID: rajeshkr.negi@sjvn.nic.in).

HOD (Procurement & Contract Deptt.)
NJHPS, SJVN Ltd. Jhakri, Tehsil Rampur Bsr., Distt Shimla (HP)-172201.

Annexure-A

BOQ [PCD-2977 (CIVIL)/2026]

Name of Work :Estimate for Repair/Strengthening of Approach Road from Steel Bridge to Dam Top on Right Bank (RD 0.00 m to 1500.00 m) at NJHPS Nathpa.

Sr.No.	Description	Unit	Qty.	Rate (Excl. GST)	Amount (excluding GST)
1	Earth work in excavation by mechanical means (Hydraulic excavator)/manual means over areas (exceeding 30 cm in depth, 1.5 m in width as well as 10 sqm on plan) including getting out and disposal of excavated earth lead upto 50 m and for all lift, as directed by Engineer-in-charge: All kind of soil.	Cum	1003.88	144	144,900
2	Demolishing Cement Concrete work manually/ by mechanical means including disposal of material within 50 metres lead as per direction of Engineer - in- charge: Nominal Concrete 1:3:6 or richer mix(i/c equivalent design mix).	Cum	96.96	1,520	147,331
3	Centering and shuttering including strutting, propping etc. and removal of form work for : Foundations, footings, bases for columns.	Sqm	1207.20	281	339,791
4	Providing and laying cement concrete in retaining walls, return walls, walls (any thickness) including attached pilasters, columns, piers, abutments, pillars, posts, struts, buttresses, string or lacing courses, parapets, coping, bed blocks, anchor blocks, plain window sills, fillets, sunken floor etc., up to floor five level, excluding the cost of centering, shuttering and finishing: 1:2:4 (1 cement : 2 coarse sand (zone-III) derived from natural sources :4 graded stone aggregate 20 mm nominal size derived from natural sources)	Cum	415.24	7,332	3,044,531
5	Providing and laying in position cement concrete of specified grade excluding the cost of centering and shuttering - All work up to plinth level :1:1½:3 (1 Cement: 1½ coarse sand (zone-III) derived from natural sources : 3 graded stone aggregate 20 mm nominal size derived from natural sources).	Cum	37.14	6,381	236,985
6	Providing & making Gabion structure with Mechanically Woven Double Twisted Hexagonal Shaped Wire mesh Gabion Boxes as per IS 16014:2012,MORTH Clause 2500, of required size, Mesh Type 10x12 (D=100 mm with tolerance of ± 2%) Zinc coated, Mesh wire diameter 3.0 mm, mechanically edged/selvedged with partitions at every 1m interval and shall have minimum 10 numbers of openings per meter of mesh perpendicular to twist, tying with lacing wire of diameter 2.2mm, supplied @ 3% by weight of Gabion boxes, filled with boulders with least dimension of 200 mm, as per drawing, all complete as per direction of Engineer-in-charge.	Cum	1008.00	3,228	3,254,247
7	Random rubble masonry with hard stone in superstructure above plinth level and upto floor five level, including leveling up with cement concrete 1:6:12 (1 cement : 6 coarse sand : 12 graded stone aggregate 20 mm nominal size) at window sills, ceiling level and the like.Cement mortar 1:6 (1 cement : 6 coarse sand)	Cum	367.80	6,619	2,434,328

8	Providing weap holes in brick masonry/stone masonry/plain reinforced concrete abutment,wing wall, return wall with 110mm dia PVC Pipe.	Rmtr	162.72	200	32,577
9	Structural steel work in single sections, fixed with or without connecting plate, including cutting, hoisting, fixing in position and applying a priming coat of approved steel primer all complete.	Kg.	30150.30	91	2,739,155
10	Providing and fixing G.I. chain link fabric fencing of required width in mesh size 50x50 mm including strengthening with 2 mm dia wire or nuts, bolts and washers as required complete as per the direction of Engineer-in-charge: Made of G.I. wire of dia. 4 mm, PVC coated to achieve outer dia not less than 5 mm in required colour and shade.	Sqm	1312.00	804	1,054,927
11	Finishing with Deluxe Multi surface paint system for interiors and exteriors using Primer as per manufacturers specifications:Painting Steel work with Deluxe Multi Surface Paint to give an even shade. Two or more coat applied @ 0.90 ltr/10 sqm over an under coat of primer applied @ 0.80 ltr/10 sqm of approved brand and manufacture.	Sqm	1454.11	122	177,082
12	Providing and laying Non Pressure NP-3 class (Medium duty) R.C.C. pipes including collars/spigot jointed with stiff mixture of cement mortar in the proportion of 1:2 (1 cement : 2 fine sand) including testing of joints etc. complete 900 mm dia RCC pipes.	Rmtr	15.00	4340	65,105
				Total Amount(Exclusive GST)	**13,670,959**